parts4heating
800-536-1582 Fax: 866-448-9304
info@parts4heating.com

Copper-Fin®

Installation & Service Manual
Models: 90,000 - 500,000 Btu/hr

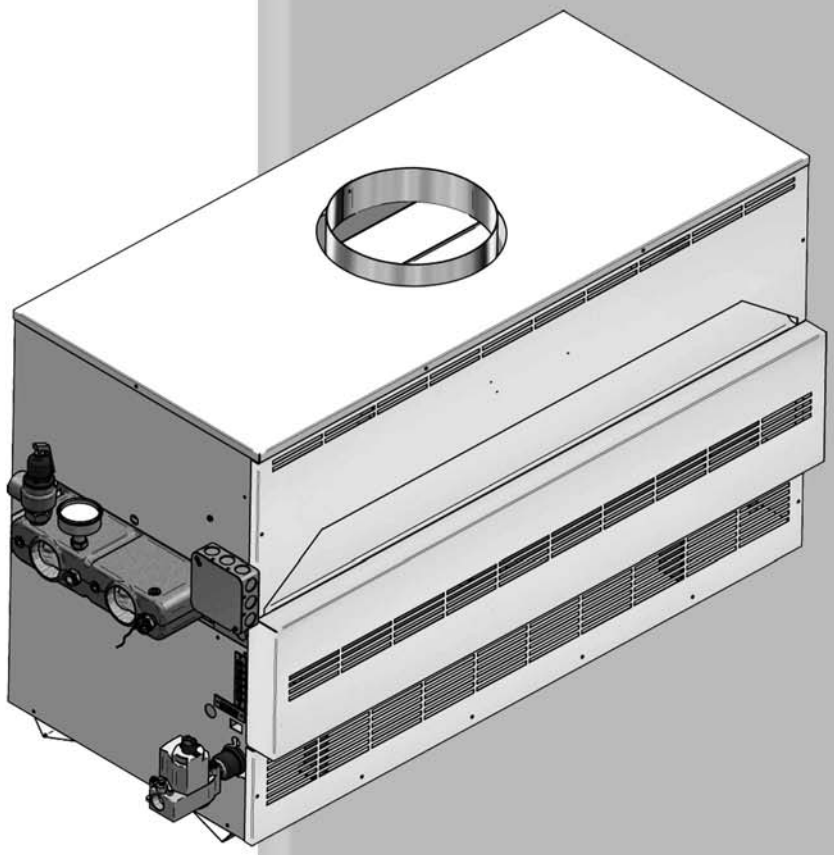

DESIGN CERTIFIED®

CERTIFIED®

Lochinvar®
High Efficiency Water Heaters, Boilers and Pool Heaters

⚠ WARNING:

This manual supplies information for the installation, operation, and servicing of the appliance. It is strongly recommended that this manual be reviewed completely before proceeding with an installation. Perform steps in the order given. Failure to comply could result in severe personal injury, death, or substantial property damage.

Save this manual for future reference.

Contents

HAZARD DEFINITIONS 2
PLEASE READ BEFORE PROCEEDING 3-4
RATINGS 5-6
THE COPPER-FIN – HOW IT WORKS 7-9
1. DETERMINE UNIT LOCATION
Locate of Unit 10
Clearances from Combustible Construction 10
Combustion and Ventilation Air 11-13
2. VENTING
A Conventional Negative Draft Venting System 14-15
Vertical Vent Termination Clearances 16
Masonry Chimney Installation 17
Inspection of a Masonry Chimney 17
Automatic Vent Damper 18
3. GAS CONNECTIONS
Gas Supply 19
Gas Pressure Test 19
Gas Connection 19
Gas Piping 20
Gas Manifold Pressure Adjustment Procedure 21
Checking Gas Supply Pressure 22
Combination Gas Valves 23
4. HYDRONIC PIPING
Relief Valve 24
Water Flow Switch (if equipped) 24
Low Water Cutoff (if equipped) 25
Typical Heating Boiler Installations 25-26
Piping of the Boiler System 26
Water Connections Heating Boilers Only 27
Circulator Pump Requirements 27
Circulator Pump Specifications 27
Circulator Pump Operation (Heating Boilers Only) 27
Primary/Secondary Boiler Piping 28
Low Temperature Bypass Requirements 28
Three Way Valves 29
Boiler Flow Rates 29
Figure 4-6_Prim. / Sec. Piping of a Single Boiler . . . 30
Figure 4-7_Prim. / Sec. Piping w/Low Temp. Bypass 31
Figure 4-8_Multiple Boilers Zoned w/Circulators 32
5. ELECTRICAL CONNECTIONS
Boiler Operating Temperature Control 33
Room Thermostat or Remote Thermostat Connection . . 33
Power Venter Connection to Terminal Strip 33
Pump Wiring for a Heating Boiler 34
Temperature Adjustment 34
Temperature Control Settings 35
Maximum Set Point Determination 35
Outdoor Air Reset Option 36
Additional Temperature Controls 38-39
Blocked Vent and Flame Roll-Out / Flame Interlock Switch . 39
6. STARTUP
Initial Startup 40
Lighting Instructions for Standing Pilot Models (F1) 40-42
Safety Shutoff Test for Standing Pilot Ignition System . . 42
Lighting Instructions for Spark Ignition Pilot Models (F9/M9) . 43-44
Safety Shutoff Test for Spark Ignition Pilot System 44
Intermittent Pilot Spark Ignition System (F9/M9) 44-45
Freeze Protection 45
Water Treatment 45
7. DOMESTIC WATER HEATERS
Water Velocity Control 46
Required Temperature Rise 46
Water Chemistry 46
Softened Water Systems 47
Pump Operation 47
Figure 7-1_Single Water Heater Piping w/Single Tank . . 48
Figure 7-2_Single Water Heater Piping w/Multiple Tanks 49
Figure 7-3_Multiple Water Heater Piping w/Single Tank . 50
Remote Sensor Installation 51
Heat Exchanger 51
Thermostat Settings 51-52
Optional Relief Valve 53
Thermal Expansion 53
Cathodic Protection 53
8. MAINTENANCE
Maintenance and Annual Startup 54-60
9. TROUBLESHOOTING 61-62
10. DIAGRAMS 63-66

Hazard definitions

The following defined terms are used throughout this manual to bring attention to the presence of hazards of various risk levels or to important information concerning the life of the product.

⚠ DANGER DANGER indicates an imminently hazardous situation which, if not avoided, will result in death or serious injury.

⚠ WARNING WARNING indicates a potentially hazardous situation which, if not avoided, could result in death or serious injury.

⚠ CAUTION CAUTION indicates a potentially hazardous situation which, if not avoided, may result in minor or moderate injury.

CAUTION CAUTION used without the safety alert symbol indicates a potentially hazardous situation which, if not avoided, may result in property damage.

NOTICE NOTICE indicates special instructions on installation, operation, or maintenance that are important but not related to personal injury or property damage.

Please read before proceeding

NOTICE This is a gas appliance and should be installed by a licensed electrician and/or certified gas supplier. Service must be performed by a qualified service installer, service agency or the gas supplier.

⚠ WARNING If the information in these instructions is not followed exactly, a fire or explosion may result causing property damage, personal injury, or death.

This appliance MUST NOT be installed in any location where gasoline or flammable vapors are likely to be present, unless the installation is such to eliminate the probable ignition of gasoline or flammable vapors.

What to do if you smell gas –

- Do not try to light any appliance.
- Do not touch any electric switch; do not use any phone in your building.
- Immediately call your gas supplier from a near by phone. Follow the gas supplier's instructions.
- If you cannot reach your gas supplier, call the fire department.

Installation and service must be performed by a qualified installer, service agency, or the gas supplier.

Warranty –

Installation and service must be performed by a qualified service installer, service agency or the gas supplier.

Factory warranty (shipped with unit) does not apply to units improperly installed or improperly operated.

Experience has shown that improper installation or system design, rather than faulty equipment, is the cause of most operating problems.

1. Excessive water hardness causing a lime/scale build-up in the copper tube is not the fault of the equipment and is not covered under the manufacturer's warranty (see *Water Treatment and Water Chemistry*).

2. Excessive pitting and erosion on the inside of the copper tube may be caused by too much water velocity through the tubes and is not covered by the manufacturer's warranty (see *Boiler Flow Rates and Temperature Rise for flow requirements*).

⚠ WARNING Improper installation, adjustment, alteration, service or maintenance can cause injury or property damage. Refer to this manual for assistance or additional information, consult a qualified installer, service agency or the gas supplier.

Checking equipment –

Upon receiving equipment, check for signs of shipping damage. Pay particular attention to parts accompanying the appliances which may show signs of being hit or otherwise being mishandled. Verify total number of pieces shown on the packing slip with those actually received. In case there is damage or a shortage, immediately notify the carrier.

Do not use this appliance if any part has been under water. The possible damage to a flooded appliance can be extensive and present numerous safety hazards. Any appliance that has been under water must be replaced.

⚠ Owner warning –

NOTE: Retain this manual for future reference.

The information contained in this manual is intended for use by qualified professional installers, service technicians, or gas suppliers. **Consult your local expert for proper installation or service procedures.**

IMPORTANT Consult and follow all local Building and Fire Regulations and other Safety Codes that apply to this installation. Consult your local gas utility company to authorize and inspect all gas and flue connections.

Your conventionally vented gas appliance must have a supply of fresh air circulating around it during burner operation for proper gas combustion and proper venting.

⚠ WARNING Should overheating occur or the gas supply fail to shut off, do not turn off or disconnect the electrical supply to the pump. Instead, shut off the gas supply at a location external to the appliance.

Please read before proceeding

⚠ WARNING To minimize the possibility of serious personal injury, fire, or damage to your appliance, never violate the following safety rules:

1. Boilers and water heaters are heat producing appliances. To avoid damage or injury, do not store materials against the appliance or the vent-air intake system. Use proper care to avoid unnecessary contact (especially children) with the appliance and vent-air intake components.
2. Never cover your appliance, lean anything against it, store trash or debris near it, stand on it or in any way block the flow of fresh air to your appliance.
3. UNDER NO CIRCUMSTANCES must flammable materials such as gasoline or paint thinner be used or stored in the vicinity of this appliance, vent-air intake system or any location from which fumes could reach the appliance or vent-air intake system.

Codes –

The equipment shall be installed in accordance with those installation regulations in force in the local area where the installation is to be made. These regulations shall be carefully followed in all cases. Authorities having jurisdiction shall be consulted before installations are made. In the absence of such requirements, the installation shall conform to the latest edition of the National Fuel Gas Code, ANSI Z223.1. Where required by the authority having jurisdiction, the installation must conform to American Society of Mechanical Engineers Safety Code for Controls and Safety Devices for Automatically Fired Boilers, ASME CSD-1. All boilers conform to the latest edition of the ASME Boiler and Pressure Vessel Code, Section IV. Where required by the authority having jurisdiction, the installation must comply with the Canadian Association Code, CAN/CGA-B149.1 and/or local codes.

This appliance meets the safe lighting performance criteria with the gas manifold and control assembly provided as specified in the ANSI standards for gas-fired appliances, ANSI Z21.13 and ANSI Z21.10.3.

Ratings

Copper-fin I=B=R Rating					Other Specifications			
Model Number Note: Change "N" to "L" for L.P. gas models.	Input MBH (Note 4)		Gross Output MBH (Note 1)	Net I=B=R Ratings Water, MBH (Note 2)	Boiler Water Content Gallons	Water Connections	Gas Connections	Vent Size (Note 3)
	Min	Max						
CBN315	158	315	258	224	1.09	2"	3/4"	8"
CBN360	180	360	295	257	1.12	2"	1"	9"
CBN399	200	399	328	285	1.22	2"	1"	10"
CBN500	250	500	410	357	1.30	2"	1"	10"

NOTICE Maximum allowed working pressure is located on the rating plate.

Notes:

1. The ratings are based on standard test procedures prescribed by the United States Department of Energy.
2. Net I=B=R ratings are based on net installed radiation of sufficient quantity for the requirements of the building and nothing need be added for normal piping and pickup. Ratings are based on a piping and pickup allowance of 1.15.
3. Copper-fins require special gas venting. Use only the vent materials and methods specified in the Installation and Service Manual.
4. The Copper-fin is orificed for operation up to 2000 feet altitude. The appliance will be derated 4% per 1000 feet above 2000 feet elevation. Consult the factory for installations above 2000 feet elevation.
5. Ratings have been confirmed by AHRI.

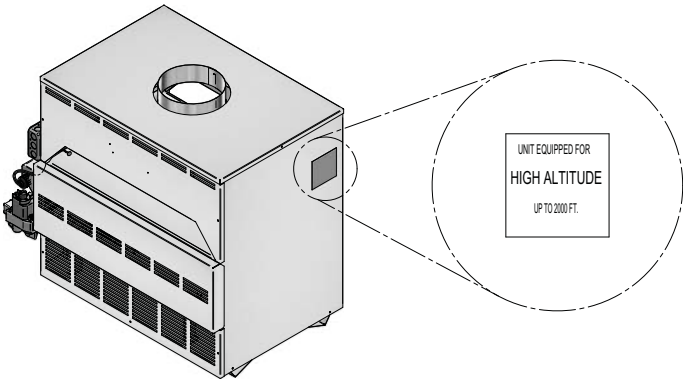

Figure A *High Altitude Label Location*

Ratings

Copper-fin Specifications					
Model Number Note: Change "N" to "L" for L.P. gas models	Input MBH	Water Content Gallons	Water Connections	Gas Connections	Vent Size (Note 1)
CWN090	90	.91	2"	1/2"	5"
CWN135	135	.95	2"	1/2"	6"
CWN180	180	.99	2"	3/4"	7"
CWN199	199	1.02	2"	3/4"	7"
CWN225	225	1.02	2"	3/4"	7"
CWN270	270	1.06	2"	3/4"	8"
CWN315	315	1.09	2"	3/4"	8"
CWN360	360	1.12	2"	1"	9"
CWN399	399	1.22	2"	1"	10"
CWN500	500	1.30	2"	1"	10"

NOTICE Maximum allowed working pressure is located on the rating plate.

Notes:

1. Copper-fins require special gas venting. Use only the vent materials and methods specified in the Installation and Service Manual.
2. The Copper-fin is orificed for operation up to 2000 feet altitude. The appliance will be derated 4% per 1000 feet above 2000 feet elevation. Consult the factory for installations above 2000 feet elevation.

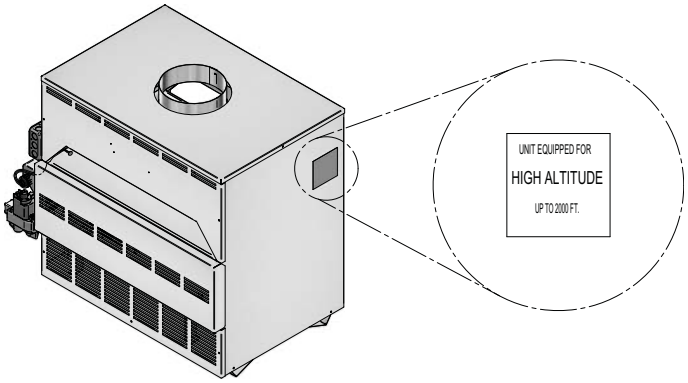

Figure B *High Altitude Label Location*

The Copper-fin - How it works...

1. **Control panel cover**
   The control panel cover provides access to the thermostat, ignition module, and transformer.

2. **Drain port (not shown)**
   Location from which the heat exchanger can be drained.

3. **Flue outlet**
   The flue outlet allows the connection of the vent pipe to the unit.

4. **Gas connection pipe**
   The gas pipe connection on this appliance should be connected to the incoming gas supply for the purpose of delivering gas to the appliance.

5. **Gas valve**
   The gas valve allows the proper amount of gas to pass into the burner for combustion.

6. **Heat exchanger**
   The heat exchanger allows system water to flow through specially designed tubes for maximum heat transfer. The glass lined headers and copper finned tubing are encased in a jacket that contains the combustion process.

7. **High limit sensor**
   Device that monitors the outlet water temperature to ensure safe operation. If the temperature exceeds its setting , it will break the control circuit, shutting the appliance down.

8. **Ignition module (F9 and M9 models only)**
   The ignition module responds to a call for heat signal to provide burner operation .

9. **Junction box**
   The junction box contains the connection points for the line voltage power and the pump.

10. **Relief valve**
    The relief valve is a safety device that ensures the maximum pressure of the appliance is not exceeded. Water heaters are supplied with a temperature and pressure relief valve.

11. **Terminal strip**
    The boiler is equipped with a terminal strip on the left side of the control panel to allow easy connection to contact points on the unit.

12. **Thermostat**
    The thermostat monitors the water temperature via a temperature sensor and will initiate a call for heat when the water temperature drops below the setpoint plus the differential on the thermostat.

13. **Temperature gauge (CW models only)**
    The temperature gauge monitors the inlet temperature of the water heater as well as the outlet temperature.

14. **Transformer**
    The transformer reduces 120 VAC supply voltage to 24 VAC for the control circuit.

15. **Water inlet**
    The water inlet is a 2" pipe connection that receives water from the system and delivers it to the heat exchanger.

16. **Water outlet**
    The water outlet is a 2" pipe connection that supplies water to the system .

17. **Burner (not shown)**
    The burner is a cylindrical stainless steel tube used to regulate burner flame.

18. **Pilot (not shown)**

    (F9 and M9 models only)
    The pilot is a spark ignition device is used to light a pilot flame which in turn is used to light the main burners.

    (F1 models only)
    The pilot uses a standing flame to light the main burner.

19. **Sight Glass (not shown)**
    The sight glass provides a view of the burner surface, burner flame, and the pilot flame.

20. **Temperature and pressure gauge (CB models only)**
    The temperature and pressure gauge monitors the outlet temperature of the boiler as well as the system water pressure.

21. **Pump (shipped with CW models only)**
    The pump ensures adequate flow to operate the unit.

22. **Pump relay**
    The pump relay energizes the pump on a call for heat.

23. **Temperature sensor**
    This sensor monitors inlet water temperature. If selected as the controlling sensor, the appliance will maintain the setpoint at this sensor.

The Copper-fin - How it works...

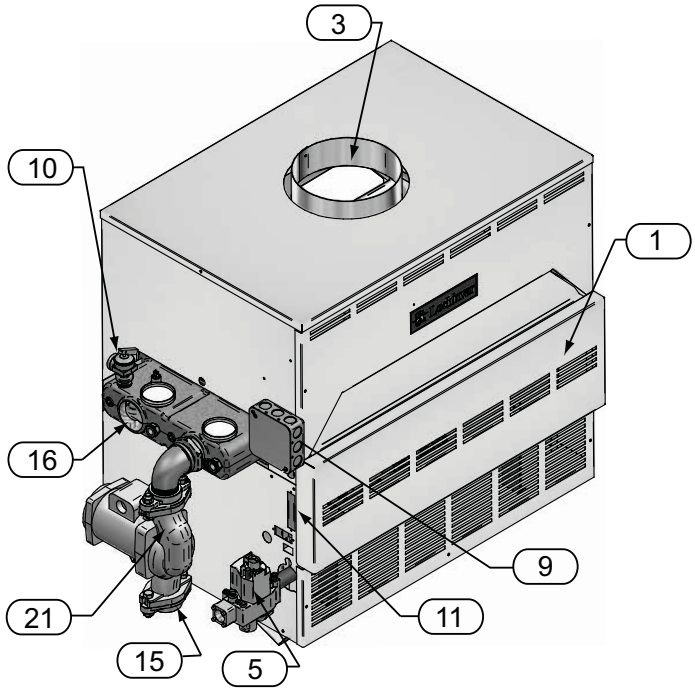

Models CWN270 Front View

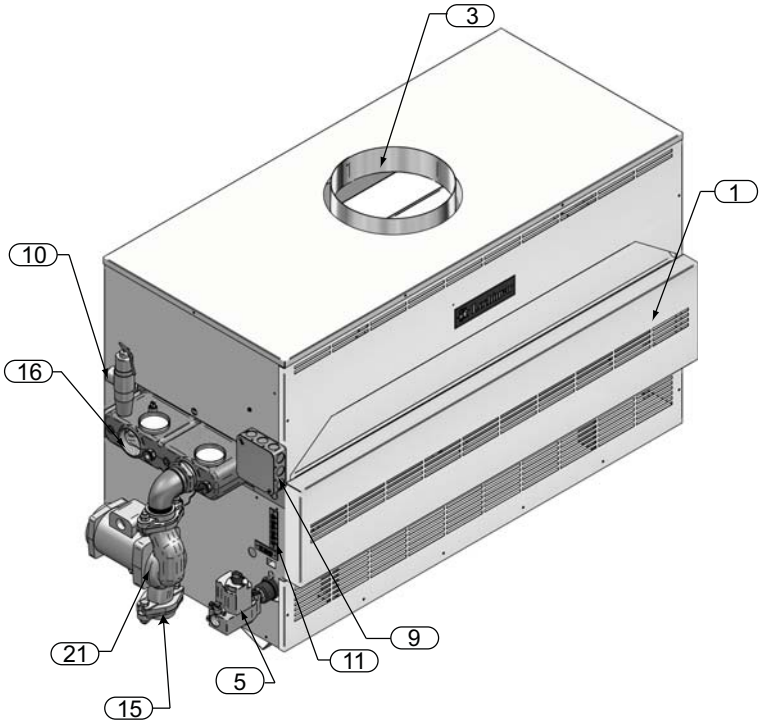

Model CWN399 Front View

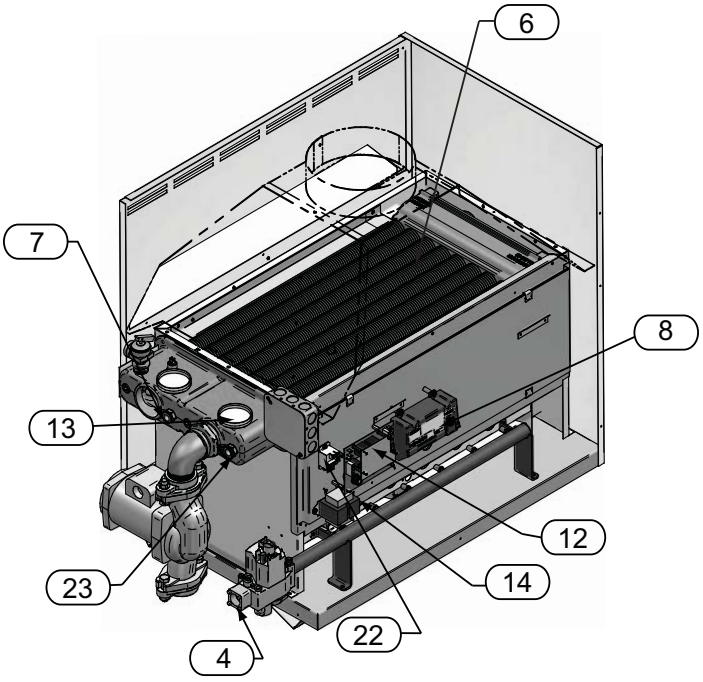

Model CWN270 (inside unit)

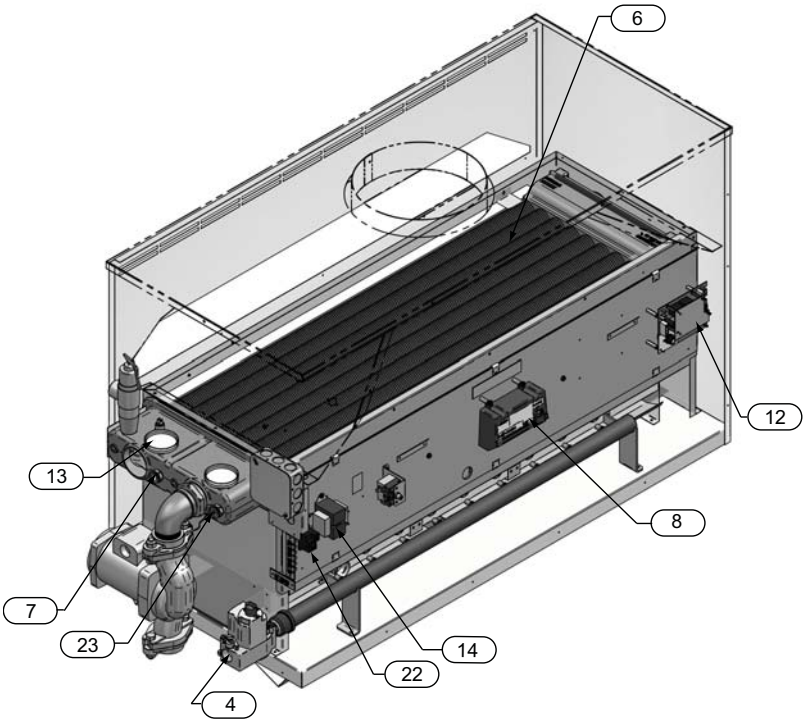

Model CWN399 (inside unit)

The Copper-fin - How it works... *(continued)*

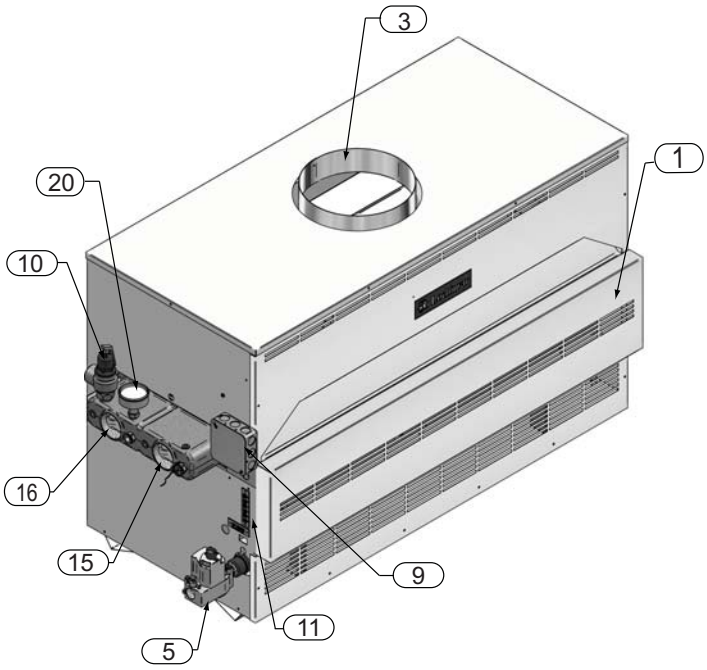

Model CBN399 Front View

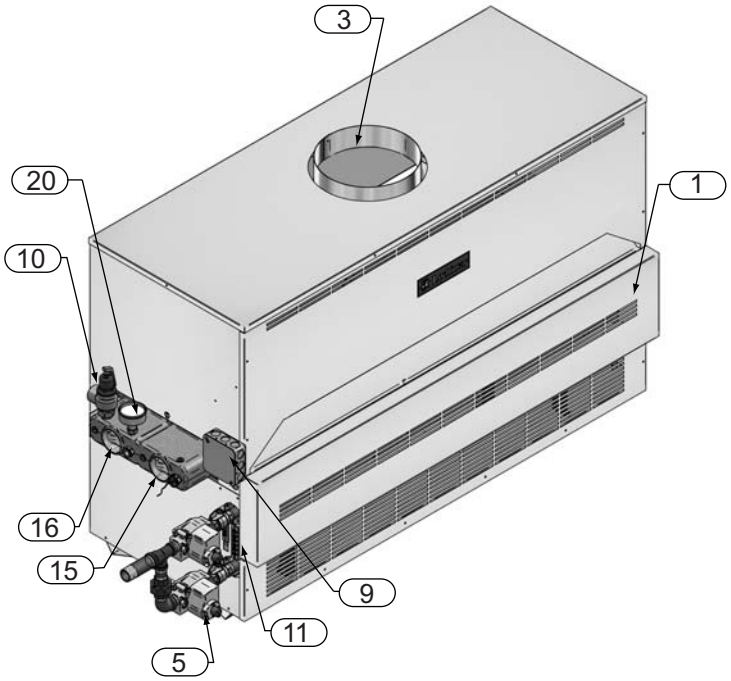

Model CBN500 Front View

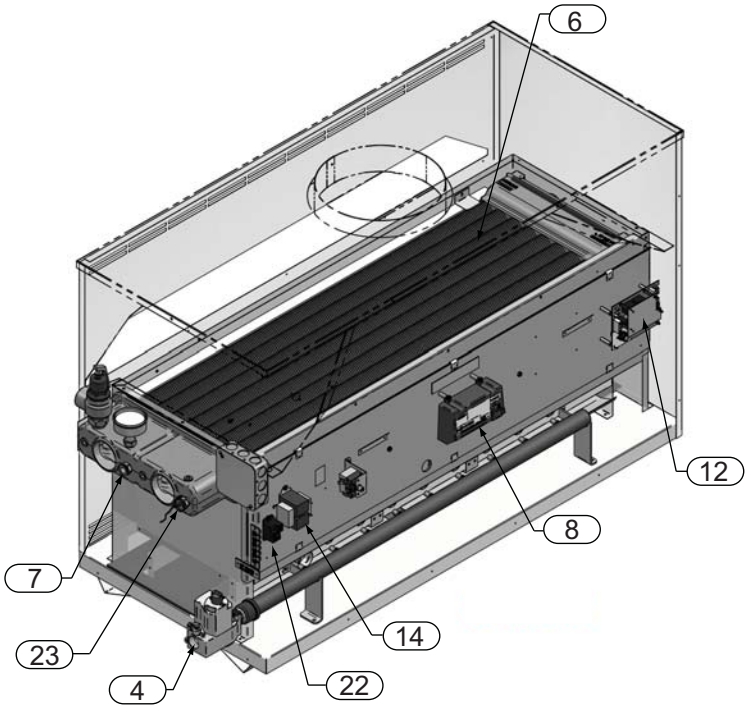

Models CBN399 (inside unit)

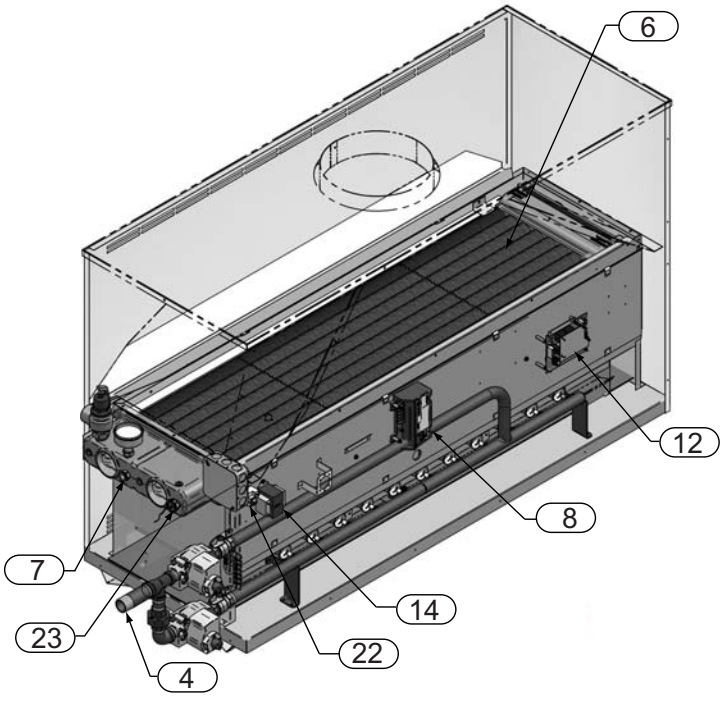

Model CBN500 (inside unit)

1 Determine unit location

Location of unit

1. Locate the appliance so that if water connections should leak, water damage will not occur. When such locations cannot be avoided, it is recommended that a suitable drain pan, adequately drained, be installed under the appliance. The pan must not restrict combustion air flow. Under no circumstances is the manufacturer to be held responsible for water damage in connection with this appliance, or any of its components.
2. The appliance must be installed indoors where it is protected from exposure to wind, rain and weather.
3. The appliance must be installed so that the ignition system components are protected from water (dripping, spraying, rain, etc.,) during appliance operation and service (circulator replacement, control replacement, etc.,).
4. Appliances located in a residential garage and in adjacent spaces that open to the garage and are not part of the living space of a dwelling unit must be installed so that all burners and burner ignition devices have a minimum clearance of not less than 18" (46cm) above the floor. The appliance must be located or protected so that it is not subject to physical damage by a moving vehicle.
5. **DO NOT** install this appliance in any location where gasoline or flammable vapors are likely to be present.
6. All units have been approved for alcove installation (an ALCOVE is a closet enclosure without a front door).
7. The appliance must not be installed on carpet.
8. All units have been approved for use on combustible surfaces.
9. Allow sufficient space for servicing pipe connections, pump and other auxiliary equipment, as well as the appliance.

NOTICE Clearances from combustible construction are noted on the appliance rating plate.

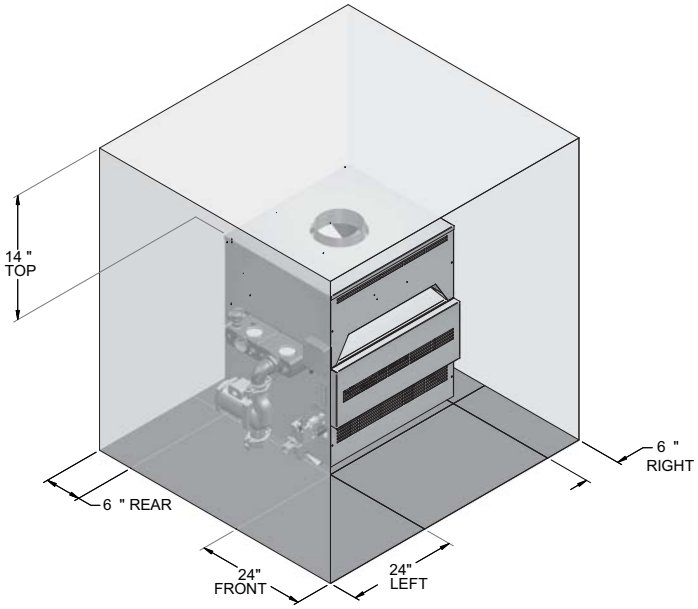

***Figure 1-1**_Alcove installation, 90,000 - 180,000 Btu/hr*

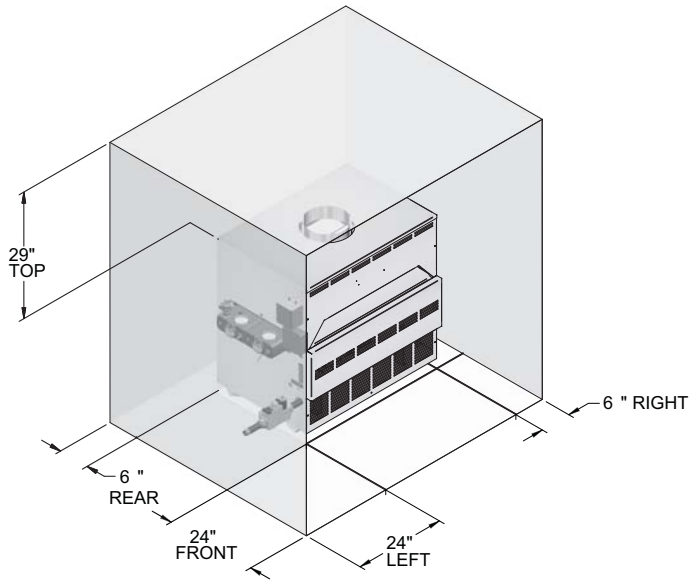

***Figure 1-2**_Alcove Installation, 225,000 - 500,000 Btu/hr*

1 Determine boiler location

Combustion and ventilation air requirements for conventionally vented appliances

Provisions for combustion and ventilation air must be in accordance with the latest edition of the National Fuel Gas Code, ANSI Z223.1, in Canada, the latest edition of CGA Standard B149 Installation Code for Gas Burning Appliances and Equipment, or applicable provisions of the local building codes.

The room where the appliance is installed MUST be provided with properly sized openings to assure adequate combustion air and proper ventilation when the appliance is installed with conventional venting.

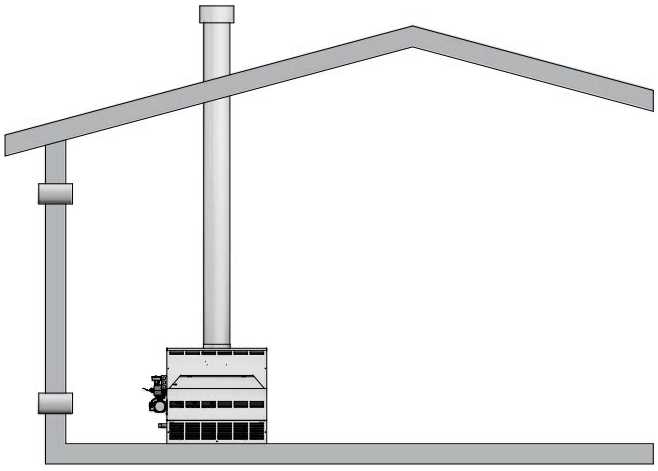

***Figure 1-3**_Combustion Air Direct from Outside*

1. If air is taken directly from outside the building with no duct, provide two permanent openings (see FIG. 1-3):

   (a) Combustion air opening, with a minimum free area of one square inch per 4000 Btu/hr input (5.5 cm^2 per kW). This opening must be located within 12" (30 cm) of the floor.

   (b) Ventilation air opening, with a minimum free area of one square inch per 4000 Btu/hr input (5.5 cm^2 per kW). This opening must be located within 12" (30 cm) of the ceiling.

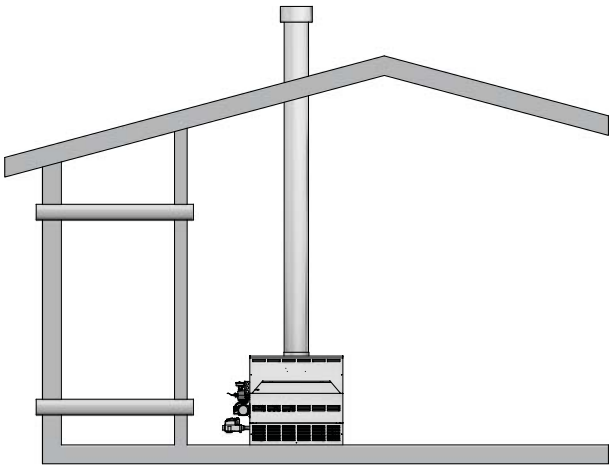

***Figure 1-4**_Combustion Air Through Ducts*

2. If combustion and ventilation air is taken from the outdoors using a duct to deliver the air to the room where the appliance is installed, each of the two openings should be sized based on a minimum free area of one square inch per 2000 Btu/hr (11cm2 per kW) (see FIG. 1-4).

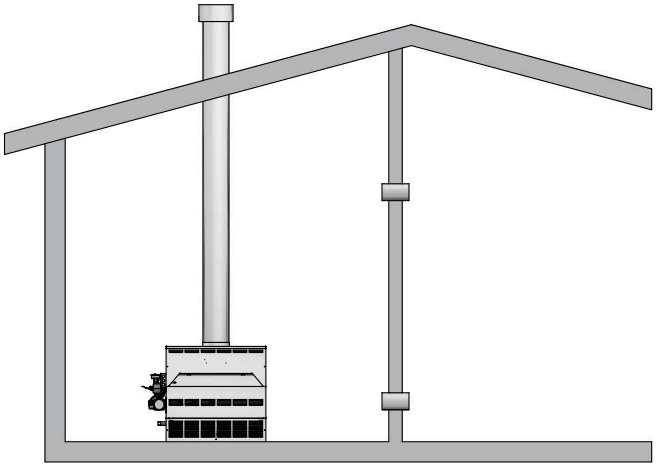

***Figure 1-5**_Combustion Air from Interior Space*

3. If air is taken from another interior space that is adequately ventilated, each of the two openings specified above should have a net free area of one square inch for each 1000 Btu/hr (22cm2 per kW) of input, but not less than 100 square inches (645cm2) (see FIG. 1-5).

1 Determine boiler location

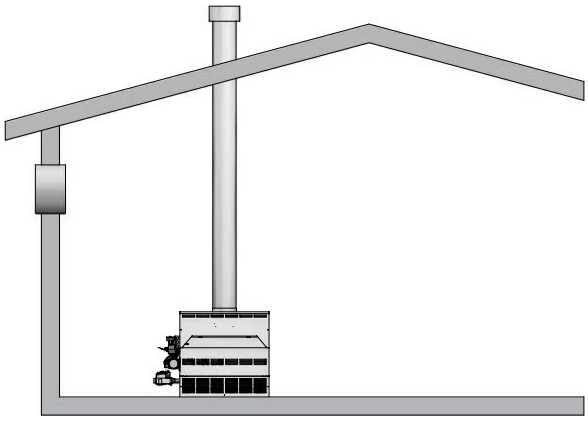

Figure 1-6_*Combustion Air from Outside Single Opening*

4. If a single combustion air opening is provided to bring combustion air in directly from the outdoors, the opening must be sized based on a minimum free area of one square inch per 3000 Btu/hr (7 cm^2 per kW). This opening must be located within 12" (30 cm) of the top of the enclosure (see FIG. 1-6).

Combustion air requirements are based on the latest edition of the National Fuel Gas Code, ANSI Z223.1, in Canada refer to National Standard CAN B149.1. Check all local code requirements for combustion air.

All dimensions are based on net free area in square inches. Metal louvers or screens reduce the free area of a combustion air opening a minimum of approximately 25%. Check with louver manufacturers for exact net free area of louvers. Where two openings are provided, one must be within 12" (30 cm) of the ceiling and one must be within 12" (30 cm) of the floor of the room where the appliance is installed. Each opening must have a net free area as specified in Table 1B (on page 13). Single openings shall be located within 12" (30 cm) of the ceiling.

⚠ CAUTION Under no circumstances should the room where the appliance is installed ever be under a negative pressure. Particular care should be taken where exhaust fans, attic fans, clothes dryers, compressors, air handling units, etc., may take away air from the appliance.

The combustion air supply must be completely free of any flammable vapors that may ignite or chemical fumes which may be corrosive to the appliance. Common corrosive chemical fumes which must be avoided are fluorocarbons and other halogenated compounds, most commonly present as refrigerants or solvents, such as freon, tricholorethylene, perchlorethylene, chlorine, etc. These chemicals, when burned, form acids which quickly attack the heat exchanger finned tubes, headers, flue collectors, and the vent system. The result is improper combustion and a non-warrantable, premature appliance failure.

The result is improper combustion and a non-warrantable, premature appliance failure.

EXHAUST FANS: Any fan or equipment which exhausts air from the equipment room may deplete the combustion air supply and/or cause a downdraft in the venting system. Spillage of flue products from the venting system into an occupied living space can cause a very hazardous condition that must be immediately corrected. If a fan is used to supply combustion air to the equipment room, the installer must make sure that it does not cause drafts which could lead to nuisance operational problems with the appliance.

1 Determine boiler location *(continued)*

TABLE - 1B
MINIMUM RECOMMENDED COMBUSTION AIR SUPPLY TO EQUIPMENT ROOM

Input Btu/hr	*Outside Air from 2 Openings Directly from Outdoors		*Outside Air from 1 Opening Directly from Outdoors, in²	*Outside Air from 2 Ducts Delivered from Outdoors		**Inside Air from 2 Ducts Delivered from Interior Space	
	Top Opening, in²	Bottom Opening, in²		Top Opening, in²	Bottom Opening, in²	Top Opening, in²	Bottom Opening, in²
90,000	23 (148 cm²)	23 (148 cm²)	30 (194 cm²)	45 (291 cm²)	45 (291 cm²)	100 (646 cm²)	100 (646 cm²)
135,000	34 (220 cm²)	34 (220 cm²)	45 (291 cm²)	68 (439 cm²)	68 (439 cm²)	135 (871 cm²)	135 (871 cm²)
180,000	45 (291 cm²)	45 (291 cm²)	60 (388 cm²)	90 (581 cm²)	90 (581 cm²)	180 (1,162 cm²)	180 (1,162 cm²)
199,999	50 (323 cm²)	50 (323 cm²)	67 (433 cm²)	100 (646 cm²)	100 (646 cm²)	200 (1,291 cm²)	200 (1,291 cm²)
225,000	57 (368 cm²)	57 (368 cm²)	75 (484 cm²)	113 (730 cm²)	113 (730 cm²)	225 (1,452 cm²)	225 (1,452 cm²)
270,000	68 (439 cm²)	68 (439 cm²)	90 (581 cm²)	135 (871 cm²)	135 (871 cm²)	270 (1,742 cm²)	270 (1,742 cm²)
315,000	79 (510 cm²)	79 (510 cm²)	105 (678 cm²)	158 (1,020 cm²)	158 (1,020 cm²)	315 (2,033 cm²)	315 (2,033 cm²)
360,000	90 (581 cm²)	90 (581 cm²)	120 (775 cm²)	180 (1,162 cm²)	180 (1,162 cm²)	360 (2,323 cm²)	360 (2,323 cm²)
399,999	100 (646 cm²)	100 (646 cm²)	134 (865 cm²)	200 (1,291 cm²)	200 (1,291 cm²)	400 (2,581 cm²)	400 (2,581 cm²)
500,000	125 (807 cm²)	125 (807 cm²)	167 (1,078 cm²)	250 (1,613 cm²)	250 (1,613 cm²)	500 (3,226 cm²)	500 (3,226 cm²)

*Outside air openings shall directly communicate with the outdoors. When combustion air is drawn from the outside through a duct, the net free area of each of the two openings must have twice (2 times) the free area required for Outside Air/2 Openings. The above requirements are for the boiler only; additional gas fired appliances in the equipment room will require an increase in the net free area to supply adequate combustion air for all appliances.

Combined interior space must be 50 cubic feet per 1,000 Btu/hr input. **Buildings MUST NOT be of *"Tight Construction". For buildings of ***"Tight Construction",** provide air openings into the building from outside.

*No combustion air openings are needed when the water heater is installed in a space with a volume NO LESS than 50 cubic feet per 1,000 Btu/hr of all installed gas fired appliances. **Buildings MUST NOT be of *"Tight Construction".**

* **"Tight Construction"** is defined as a building with less than 0.40 ACH (air changes per hour).

Vent installations for connection to gas vents or chimneys must be in accordance with "Venting of Equipment," of the latest edition of the National Fuel Gas Code, ANSI Z223.1, in Canada, the latest edition of CGA Standard B149 Installation Code for Gas Burning Appliances and Equipment or applicable provisions of the local building codes.

Adequate combustion and ventilation air must be supplied to the room where the appliance is installed in accordance with the latest edition of the National Fuel Gas Code, ANSI Z223.1, in Canada, the latest edition of CGA Standard B149 Installation Code for Gas Burning Appliances and Equipment, or applicable provisions of the local building codes.

2 Venting

The distance of the vent terminal from adjacent buildings, windows that open and building openings MUST comply with the latest edition of the National Fuel Gas Code, ANSI Z223.1, in Canada, the latest edition of CGA Standard B149 Installation Code for Gas Burning Appliances and Equipment.

Vent connection is made directly to the top of the appliance. This appliance is designed with a built-in draft diverter. No additional external draft hood is required. The connection from the appliance vent to the common vent or chimney must be made as direct as possible.

A Conventional Negative Draft Venting System

The negative draft in a conventional vent installation must be within the range of a negative 0.02 to 0.05 inches water column to ensure proper operation. All draft readings are made while the appliance is in stable operation (approximately 2 to 5 minutes).

Multiple appliance installations with combined venting or common venting with other negative draft appliances require that each appliance must have draft within the proper range. If the draft measured above the appliance's built-in draft diverter exceeds the specified range in a dedicated chimney for a single appliance installation or in combined venting with other negative draft appliances, a barometric damper must be installed to control draft.

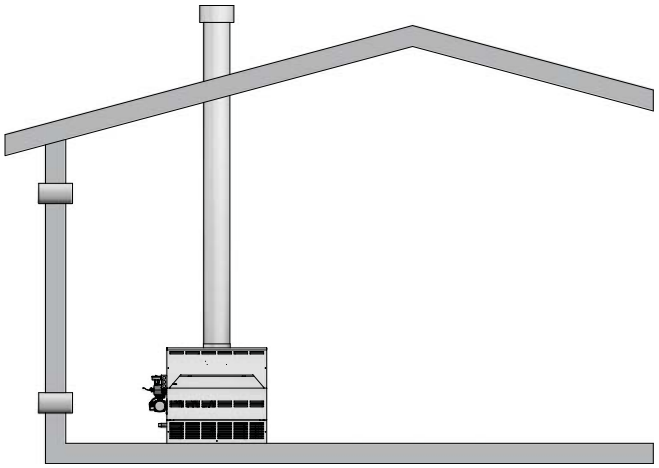

***Figure 2-1**_Conventional Negative Draft Vertical Venting*

TABLE - 2A VENT PIPE SIZES	
Input Btu/hr	**Flue Size**
90,000	5"
135,000	6"
180,000	7"
199,999	7"
225,000	7"
270,000	8"
315,000	8"
360,000	9"
399,999	10"
500,000	10"

On a conventionally vented, negative draft appliance, the connection from the vent to the chimney or vent termination on the outside of the building MUST be made with listed Type "B" double wall (or equivalent) vent connectors and must be direct as possible with no reduction in diameter. Use the National Fuel Gas Code venting tables for double wall vent to properly size all vent connectors and stacks. The Type "B" vent and accessories, such as firestop spacers, thimbles, caps, etc., MUST be installed in accordance with the manufacturer's listing. The vent connector and firestop must provide correct spacing to combustible surfaces and seal to the vent connector on the upper and lower sides of each floor or ceiling through which the vent connector passes.

Any vent materials used must be listed by a nationally recognized test agency for use as vent material.

2 Venting *(continued)*

Locate appliance as close as possible to a chimney or gas vent.

Avoid long horizontal runs of the vent pipe, 90° elbows, reductions and restrictions. Horizontal portions of the venting system shall be supported to prevent sagging. Horizontal runs must slope upwards not less than 1/4 inch per foot (21 mm/m) from the appliance to the vent terminal. Follow manufacturer's instructions.

Do not use an existing chimney as a raceway for a flue pipe if another appliance or fireplace is vented through the chimney.

The weight of the venting system must not rest on the appliance. Adequate support of the venting system must be provided in compliance with local codes and other applicable codes. All connections should be secured with rustproof sheet metal screws.

Vent connectors serving appliances vented by natural draft shall not be connected to any portion of a mechanical draft system operating under positive pressure. Connection to a positive pressure chimney may cause flue products to be discharged into the living space causing serious health injury.

Common venting systems may be too large when an existing appliance is removed. At the time of removal of an existing appliance, the following steps shall be followed with each appliance remaining connected to the common venting system placed in operation, while other appliances remaining connected to the common venting system are not in operation.

(a) Seal any unused opening in the common venting system.

(b) Visually inspect the venting system for proper size and horizontal pitch and determine there is no blockage or restriction, leakage, corrosion and other deficiencies which could cause an unsafe condition.

(c) Insofar as is practical, close all building doors and windows and all doors between the space in which the appliances remaining connected to the common venting system are located and other spaces of the building. Turn on clothes dryers and any other appliances not connected to the common venting system. Turn on any exhaust fans, such as range hoods and bathroom exhausts, so they will operate at maximum speed. Do not operate a summer exhaust fan. Close fireplace dampers.

(d) Place in operation the appliance being inspected. Follow the lighting instructions. Adjust thermostat so appliance will operate continuously.

(e) Test for spillage at the draft hood/relief opening after 5 minutes of main burner operation. Use the flame of a match or candle, or smoke from a cigarette, cigar or pipe.

(f) After it has been determined that each appliance remaining connected to the common venting system properly vents when tested as outlined above, return doors, windows, exhaust fans, fireplace dampers and other gas burning appliances to their previous conditions of use.

(g) Any improper operation of the common venting system should be corrected so that the installation conforms to the latest edition of the National Fuel Gas Code, ANSI Z223.1. In Canada, the latest edition of CGA Standard B149 Installation Code for Gas Burning Appliances and Equipment. When resizing any portion of the common venting system, the common venting system should be resized to approach the minimum size as determined using the appropriate tables in Part 11 in the latest edition of the National Fuel Gas Code, ANSI Z223.1. In Canada, the latest edition of CGA Standard B149 Installation Code for Gas Burning Appliances and Equipment.

2 Venting

Vertical Vent Termination Clearances

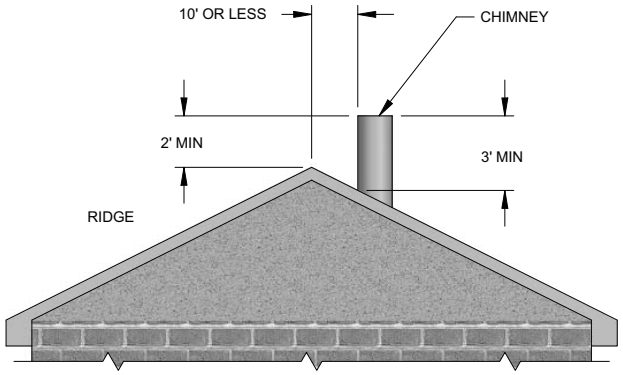

***Figure 2-2**_Vent Termination from Peaked Roof 10' or Less from Ridge*

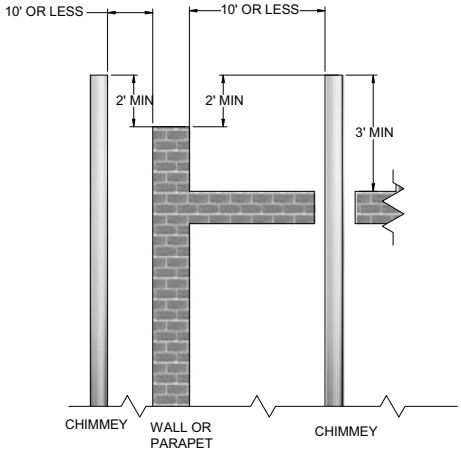

***Figure 2-4**_Vent Termination from Flat Roof 10' or Less from Parapet Wall*

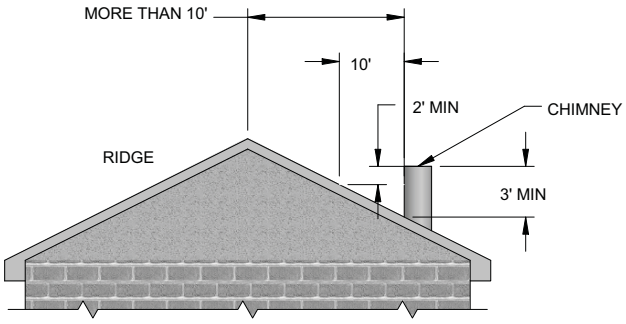

***Figure 2-3**_Vent Termination from Peaked Roof More than 10' from Ridge*

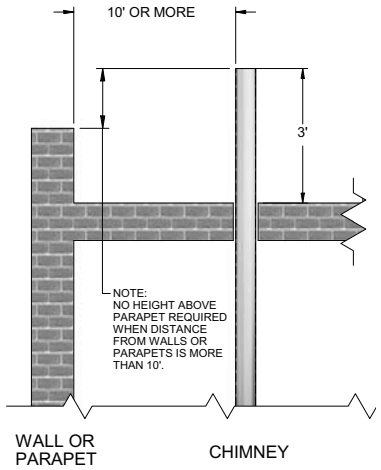

***Figure 2-5**_Vent Termination from Flat Roof More Than 10' from Parapet Wall*

The vent terminal should be vertical and exhaust outside the building at least 2 feet (0.61m) above the highest point of the roof within a 10 foot (3.05m) radius of the termination. The vertical termination must be a minimum of 3 feet (0.91m) above the point of exit.

A vertical terminal less than 10 feet (3.05m) from a parapet wall must be a minimum of 2 feet (0.61m) higher than the parapet wall.

The vent cap should have a minimum clearance of 4 feet (1.22m) horizontally from and in no case above or below, unless a 4 foot (1.22m) horizontal distance is maintained from electric meters, gas meters, regulators and relief equipment.

The venting system shall terminate at least 3 feet (0.9m) above any forced air inlet within 10 feet (3.05m).

The venting system shall terminate at least 4 feet (1.2m) below, 4 feet (1.2m) horizontally from, or 1 foot (30cm) above any door, window or gravity air inlet into any building.

Do not terminate the vent in a window well, stairwell, alcove, courtyard or other recessed area. **The vent can not terminate below grade.** The bottom of the vent terminal shall be located at least 12 inches (30cm) above grade.

To avoid a blocked vent condition, keep the vent cap clear of snow, ice, leaves, debris, etc.

Flue gases will form a white plume in winter. Plume could obstruct window view.

Flue gas condensate can freeze on exterior surfaces or on the vent cap. Frozen condensate on the vent cap can result in a blocked vent condition. Flue gas condensate can cause discoloration of exterior building surfaces. Adjacent brick or masonry surfaces should be protected with a rust resistant sheet metal plate.

NOTICE

Examine the venting system at least once a year. Check all joints and vent pipe connections for tightness. Also check for corrosion or deterioration. Immediately correct any problems observed in the venting system.

2 Venting *(continued)*

Masonry Chimney Installation

A masonry chimney must be properly sized for the installation of a gas fired appliance. Venting of an appliance into a cold or oversized masonry chimney can result in operational and safety problems. Exterior masonry chimneys, with one or more sides exposed to cold outdoor temperatures, are more likely to have venting problems. The temperature of the flue gases from an appliance may not be able to sufficiently heat the masonry structure of the chimney to generate proper draft. This will result in condensing of flue gases, damage the masonry flue/tile, insufficient draft and possible spillage of flue gases into an occupied living space. Carefully inspect all chimney systems before installation. If there is any doubt about the sizing or condition of a masonry chimney, it must be relined with a properly sized and approved chimney liner system.

Inspection of a Masonry Chimney

A masonry chimney must be carefully inspected to determine its suitability for the venting of flue gases. A clay tile lined chimney must be structurally sound, straight and free of misaligned tile, gaps between liner sections, missing sections of liner or any signs of condensate drainage at the breaching or clean out. If there is any doubt about the condition of a masonry chimney, it must be relined. An unlined masonry chimney must not be used to vent flue gases from this appliance. An unlined chimney must be relined with an approved chimney liner system when a new appliance is being attached to it. Metallic liner systems (Type "B" double wall or flexible or rigid metallic liners) are recommended. Consult with local code officials to determine code requirements or the advisability of using or relining a masonry chimney.

Sidewall Venting

This appliance is NOT approved for sidewall venting with the negative draft venting system as shipped from the factory. An induced draft fan MUST be used if the installation requires that the flue gases be vented out a sidewall. A properly sized and installed induced draft fan may also be used to vent the flue gases vertically if required by job site conditions. The induced draft fan must be listed by a nationally recognized test agency, be properly sized and installed per the recommendations of the induced draft fan manufacturer and meet local code requirements. Use care to ensure that the mechanically supplied draft does not exceed the range of a negative 0.02 to 0.05 inches water column to ensure proper operation. If draft exceeds the specified range, the fan must be adjusted or the installation of a barometric damper in the flue may be required to properly control draft.

An induced draft fan MUST be interlocked into the appliance's control circuit to start when the appliance calls for heat. The induced draft fan MUST also be equipped with a proving switch, properly interlocked into the appliance's control circuit to prove fan operation before the main burners are allowed to fire. A vertical or sidewall vent termination for an induced draft fan MUST be installed per the recommendations of the fan manufacturer and provide proper clearances from any combustion or ventilation openings, windows, doors or other openings into the building. All induced draft fan installations must comply with local code requirements.

Fan Assisted Venting

A Power Venter kit is available on models 90,000 - 135,000 Btu/hr, water heaters only.

TABLE - 7B
VENT MATERIALS

Kit Number	Input Btu / hr	Material
KIT3104	90,000	CPVC Rated
	135,000	CPVC Rated
Minimum Vent Length = 12 Equivalent Feet * (ALL UNITS)		
Maximum Vent Length = 25 Equivalent Feet * * (ALL UNITS)		
*Equivalent Feet: 90° Elbow = 5 Feet 45° Elbow = 3 Feet		

Figure 2-6_*CW135 with Fan Assisted Venting*

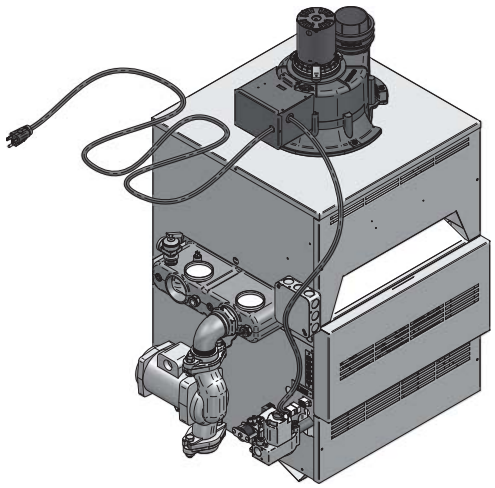

2 Venting

Automatic Vent Damper

This heating boiler is design certified for use with the automatic vent damper (FIG. 2-7) part number printed on the boiler's rating plate. A vent damper is optional on heating boilers above 360,000 Btu/hr. Automatic vent dampers are not required or furnished on potable water heaters. Water heaters with inputs of 360,000 Btu/hr and less may be ordered with the vent damper as an option. A vent damper is a useful tool for saving energy when installed inside the living space where air can circulate freely around the appliance. The vent damper will not save as much, if any, energy if it is installed in locations such as:

- Unheated garage
- Attic
- Crawlspace
- Mechanical room that is vented outdoors

For installation and maintenance on the vent damper, refer to the instructions supplied with the vent damper.

Larger input heating boilers and water heaters will have a jumper plug installed in the terminal block to allow operation without a damper. Remove the jumper plug from the terminal block to connect an optional vent damper wire harness (water heater shown in FIG. 2_8). The jumper plug MUST be in place if an optional vent damper is not used on water heaters and larger input heating boilers.

⚠ WARNING Do not install the vent damper within 6" (152 mm) of combustible materials.

⚠ DANGER Install the vent damper to service only the single appliance for which it is intended. If improperly installed, a hazardous condition such as an explosion or carbon monoxide poisoning could result.

The damper position indicator must be in a visible location with access for service following installation. The damper must be in an open position when appliance main burners are operating.

The part number for the automatic vent damper required on this heating boiler is printed on the rating plate. Vent damper regulations are design certified per the latest edition of ANSI Z21.66.

***Figure 2-7**_CB with Vent Damper and Vent Damper Terminal Block*

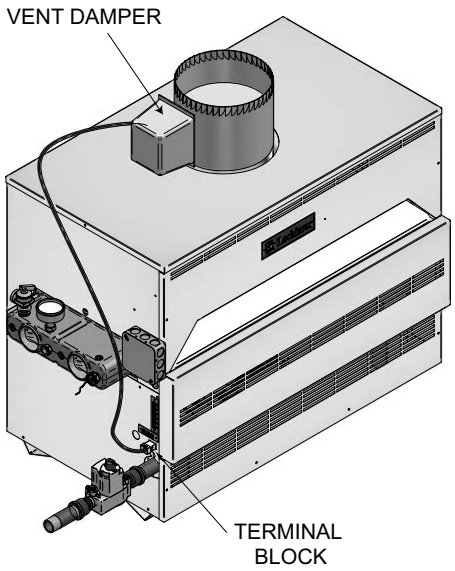

***Figure 2-8**_CW with Vent Damper*

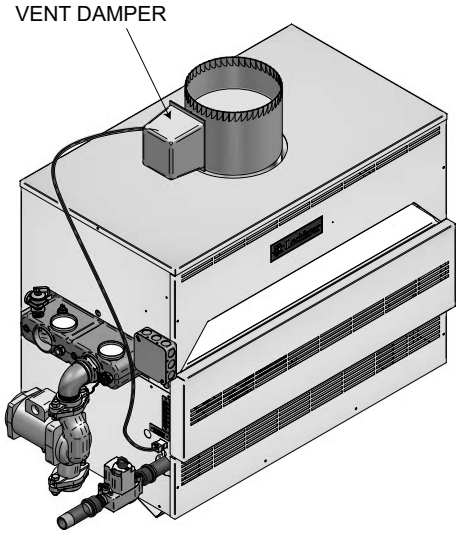

⚠ WARNING The vent damper must be installed directly on the flue outlet located on the top of the draft hood (see FIG. 2-7). Do not alter the wire harness supplied with the vent damper. Follow the instructions supplied with the vent damper.

⚠ CAUTION An appliance which is shut down or will not operate may experience freezing due to convective air flow down the flue pipe connected to the unit. Proper freeze protection must be provided, see *Freeze Protection* in the Startup Section of this manual.

3 Gas connections

Gas Supply

Verify that the appliance is supplied with the type gas specified on the rating plate. This appliance is orificed for operation up to 2000 feet altitude. The appliance will be derated 4% per 1000 feet above 2000 feet elevation. Consult the factory for installations above 2000 feet elevation. Field conversions for operation at high altitude must be performed by certified personnel only. The appliance will be marked to indicate suitability for high altitude operation.

GAS SUPPLY PRESSURE: Measured at the inlet pressure tap located upstream of the combination gas valve(s) see FIG.'s 3-5 and 3-6, page 23.

TABLE - 3A
GAS SUPPLY PRESSURE

	Natural Gas	LP Gas
Max. (Inches Water Column)	14	14
Min. (Inches Water Column)	*4.5	11
Min. (Inches Water Column)	**5.0	11

*Models 90,000 - 360,000 Btu/hr Only
**Models 399,999 - 500,000 Btu/hr Only

Maximum inlet gas pressure must not exceed the value specified. Minimum value listed is for the purposes of input adjustment.

MANIFOLD PRESSURE: Measured at the pressure tap on the downstream side of the combination gas valve(s) (see FIG.'s 3-5 and 3-6, page 23). The gas regulator settings for single stage and two stage operation are factory set to supply proper manifold pressure for normal operation. To check manifold pressure, see *Manifold Adjustment Procedure*. Do not increase manifold pressure beyond specified pressure settings shown below in Table 3B.

TABLE - 3B
MANIFOLD PRESSURE

Input Gas Btu/hr	Single and Two-Stage		Two Stage	
	Full or High Fire Settings		Low Fire Settings	
	Natural Gas	LP Gas	Natural Gas	LP Gas
90,000 - 180,000	3.5"	10"	0.9"	2.5"
199,999	2.9"	7.5"	0.9"	2.5"
215,000 - 399,999	3.5"	10"	0.9"	2.5"
500,000	3.5"	10" (two valves)	N/A	N/A

Gas Pressure Test

1. The appliance must be disconnected from the gas supply piping system during any pressure testing of that system at a test pressure in excess of 1/2 PSIG (3.5kPa).
2. The appliance must be isolated from the gas supply piping system by closing a manual shutoff valve during any pressure testing of the gas supply piping system at test pressures equal to or less than 1/2 PSIG (3.5kPa).
3. The appliance and its gas connection must be leak-tested before placing it in operation.

Gas Connection

1. Safe operation of the appliance requires properly sized gas supply piping.
2. Gas pipe size may be larger than appliance gas connection.
3. Installation of a union is suggested for ease of service, see FIG. 3-1 on page 20.
4. Install a manual main gas shutoff valve, outside of the appliance gas connection and before the gas valve or manifold connection, when local codes require.
5. A trap (drip leg) **MUST** be provided by the installer in the inlet of the gas connection to the appliance, see FIG. 3-1 on page 20.
6. The combination gas valve has an integral vent limiting device and does not require venting to atmosphere, outside the building.
7. Optional gas controls may require routing of bleeds and vents to the atmosphere, outside the building when required by local codes.

TABLE - 3C
FITTINGS TO EQUIVALENT STRAIGHT PIPE

Diameter Pipe (inches)							
3/4	1	1 1/4	1 1/2	2	3	4	5
Equivalent Length of Straight Pipe (feet)							
2	2	3	4	5	10	14	20

TABLE - 3D
GAS CONNECTIONS

Btu/hr INPUT	Pipe Size
90,000 - 135,000	1/2"
180,000 - 315,000	3/4"
360,000 - 500,000	1

3 Gas connections

TABLE - 3E
MULTIPLE APPLIANCE INSTALLATIONS
GAS PIPING SIZE CHART

Nominal Iron Pipe Size Inches	Length of Pipe in Straight Feet														Maximum Capacity of Pipe in Thousands of Btu/hr per hour for gas pressures of 13.5 Inches Water Column (0.5 PSIG) or less and a pressure drop of 0.5 Inch Water Column (Based on NAT GAS, 1025 Btu/hr per Cubic Foot of Gas and 0.60 Specific Gravity)
	10	20	30	40	50	60	70	80	90	100	125	150	175	200	
3/4	369	256	205	174	155	141	128	121	113	106	95	86	79	74	
1	697	477	384	328	292	267	246	226	210	200	179	164	149	138	
1 1/4	1,400	974	789	677	595	543	502	472	441	410	369	333	308	287	
1 1/2	2,150	1,500	1,210	1,020	923	830	769	707	666	636	564	513	472	441	
2	4,100	2,820	2,260	1,950	1,720	1,560	1,440	1,330	1,250	1,180	1,100	974	871	820	
2 1/2	6,460	4,460	3,610	3,100	2,720	2,460	2,310	2,100	2,000	1,900	1,700	1,540	1,400	1,300	
3	11,200	7,900	6,400	5,400	4,870	4,410	4,000	3,800	3,540	3,300	3,000	2,720	2,500	2,340	
4	23,500	16,100	13,100	11,100	10,000	9,000	8,300	7,690	7,380	6,870	6,150	5,640	5,130	4,720	

Gas Piping

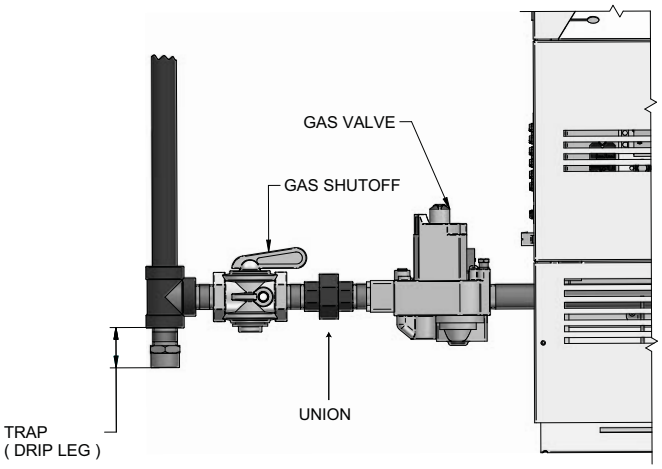

Figure 3-1_*Gas Line Connection*

All gas connections must be made with pipe joint compound resistant to the action of liquefied petroleum and natural gas. All piping must comply with local codes. Tubing installations must comply with approved standards and practices. Reference FIG. 3-1 for a typical installation.

Install Piping to Control

1. The gas line should be a separate line direct from the meter unless the existing gas line is of sufficient capacity. Verify pipe size with your gas supplier.
2. Use new, properly threaded black iron pipe free from chips. If tubing is used, make sure the ends are cut squared, deburred and clean. All tubing bends must be smooth and without deformation. Avoid flexible gas connections. Internal diameter of flexible lines may not provide proper volume of gas.
3. Run pipe or tubing to the gas valve or manifold inlet. If tubing is used, obtain a tube to pipe coupling to connect the tubing to the gas valve or manifold inlet.
4. DO NOT OVER TIGHTEN. Over tightening may result in damage to the gas valves. Valve distortion or malfunction may result if the pipe is inserted too deeply into the gas valve.
5. Apply a moderate amount of good quality pipe compound (DO NOT use Teflon tape) to pipe only, leaving two end threads bare.
6. Remove seal over gas valve or manifold inlet.
7. Connect pipe to gas valve or manifold inlet. Use wrench to square ends of the gas valve (FIG. 3-2).

3 Gas connections *(continued)*

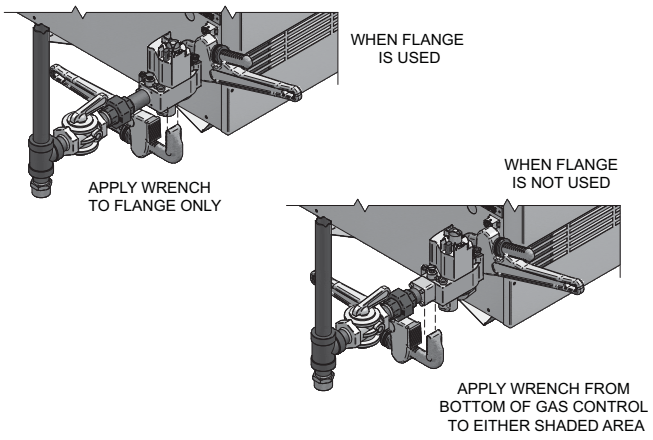

Figure 3-2_Wrench

8. For L.P. gas, consult your L.P. gas supplier for expert installation.

IMPORTANT Upon completion of any piping connections to the gas system, leak test all gas connections with a soap solution while system is under pressure. Immediately repair any leaks found in the gas train or related components. **Do Not** operate an appliance with a leak in the gas train, valves or related piping.

Gas Manifold Pressure Adjustment Procedure

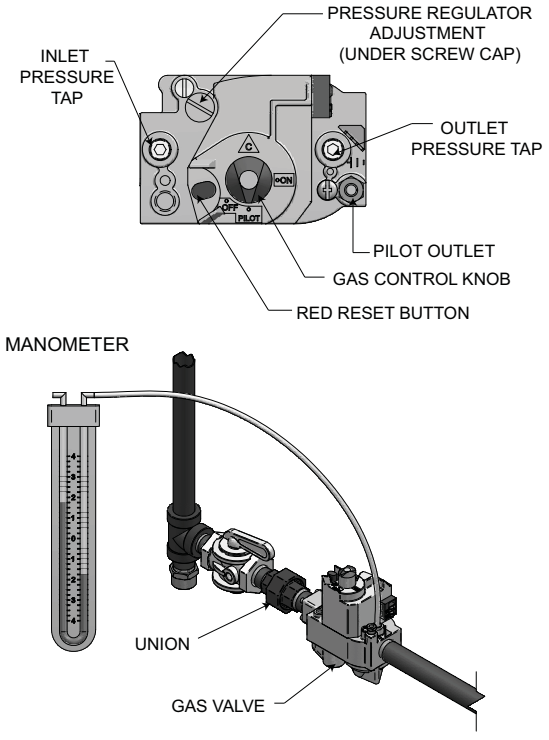

Figure 3-3_Manifold Pressure Adjustment

1. Turn the power "OFF" at the main disconnect switch.
2. Turn gas valve control knob to "PILOT" position on standing pilot models. Ensure that the standing pilot remains on. If the pilot goes out, follow the "Lighting Instructions" in Section 6 - Startup for standing pilot models to light the pilot. Turn gas valve control knob to "OFF" position on spark ignition models.
3. Remove the 1/8" hex plug located on the outlet side of the gas valve and install a fitting suitable to connect to a manometer or magnahelic gauge. See FIG. 3-3. Minimum range of scale should be up to 5" w.c. for Natural gas models and 10" w.c. for L.P. gas models.
4. The 500,000 Btu/hr model will have two gas valves with a pressure regulator on each valve. Repeat the following adjustment procedure to set the manifold pressure on each gas valve.
5. Remove the pressure regulator adjustment cap screw on the gas valve. See FIG. 3-3 for location.
6. Turn the power "ON" at the main disconnect switch.
7. Turn gas valve control knob to "ON" position.
8. Set the thermostat(s) to call for heat.
9. Observe gas regulator pressure when all burners are firing. See Table 3B, Manifold Pressure (page 19) for proper regulator pressure settings.
10. If adjustment is necessary, turn regulator adjustment screw clockwise to raise regulator gas pressure, counterclockwise to lower gas pressure, to proper setting. ***NOTE:*** Adjustment fitting is plastic and may require slightly greater turning force than a metal fitting.
11. Turn the power "OFF" at the main disconnect switch.

NOTICE Do not increase regulator pressure beyond specified pressure setting.

12. Turn gas valve control knob to "PILOT" position on standing pilot models. Turn gas valve control knob to "OFF" position on spark ignition models.
13. Remove fitting from the gas valve and replace the 1/8" hex plug that was previously removed and tighten.
14. Repeat the adjustment procedure for the second gas valve on the 500,000 Btu/hr model.
15. Turn the gas valve control knob(s) to "ON" position.
16. Turn the power "ON" at the main disconnect switch. The appliance is now ready to operate.

If manifold pressure can not be properly adjusted, use the procedure on page 22 to check gas supply pressure with a manometer connected to the inlet pressure tap on the gas control.

3 Gas connections

Checking Gas Supply Pressure

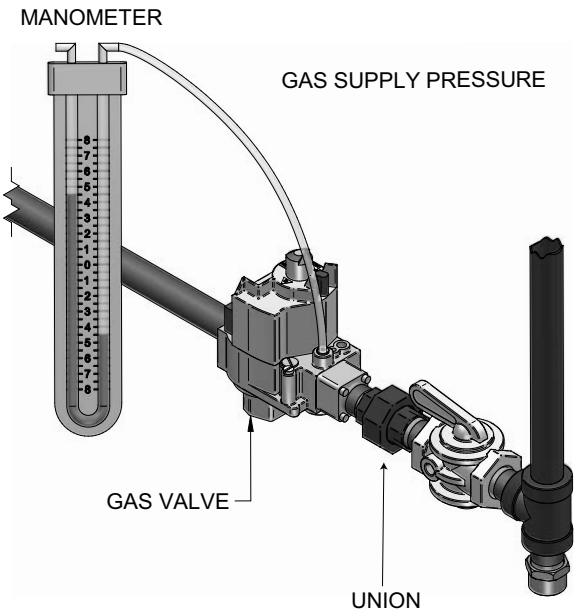

Figure 3-4_*Gas Supply Pressure*

1. Turn the power "OFF" at the main disconnect switch.
2. Turn gas valve control knob(s) to the "OFF" position.
3. The 500,000 Btu/hr model will have two gas valves. Turn the gas valve control knob on each valve to the "OFF" position.
4. Shut off gas supply at the manual valve in the gas piping to the appliance. If fuel supply is L.P. gas, shut off gas supply at the tank.
5. Remove the 1/8" hex plug, located on the "inlet" side of the gas valve and install a fitting suitable to connect to a manometer or magnahelic gauge. On two gas valve models, remove the hex plug from the gas valve closest to the gas supply connection. Range of scale should be 14" w.c. or greater to check inlet pressure. See FIG.'s 3-3 and 3-4 for location.
6. Turn on gas supply at the manual valve, turn on L.P. gas at tank if required.
7. Turn the power "ON" at the main disconnect switch.
8. Turn gas valve control knob to "PILOT" position on standing pilot models. Follow the "Lighting Instructions" in Section 6 - Startup for standing pilot models to light the pilot . Turn gas valve control knob to the "ON" position when the pilot is established. Turn gas valve control knob(s) to the "ON" position on spark ignition models.
9. Set the thermostat(s) to call for heat.
10. Observe the gas supply pressure with all burners firing. Ensure inlet pressure is within specified range. Check gas supply pressure with all other gas fired appliances in operation to ensure proper gas volume during periods of peak gas usage.
11. If gas pressure is out of range, contact gas utility, gas supplier, qualified installer or service agency to determine necessary steps to provide proper gas pressure to the appliance.
12. If the gas supply pressure is within the specified range, proceed with the following steps to return the appliance to service.
13. Turn the power "OFF" at the main disconnect switch.
14. Turn gas valve control knob to "PILOT" position on standing pilot models. Turn gas valve control knob(s) to "OFF" position on spark ignition models.
15. Shut off gas supply at the manual valve in the gas piping to the appliance. If fuel supply is L.P. Gas, shut off gas supply at the tank.
16. Remove the manometer and related fittings from the "inlet" side of the gas valve, replace 1/8" hex plug in gas valve.
17. Turn on gas supply at the manual valve, turn on L.P. Gas at tank if required.
18. Turn the power "ON" at the main disconnect switch.
19. Turn the gas valve control knob(s) to the "ON" position. If the pilot is not burning, follow the "Lighting Instructions" in Section 6 - Startup for standing pilot models to light the pilot. Spark ignition models will automatically light the pilot on a call for heat.
20. Set the thermostat to call for heat. The appliance is now ready to operate.

IMPORTANT

Upon completion of any testing on the gas system, leak test all gas connections with a soap solution while main burners are operating. Immediately repair any leak found in the gas train or related components. **Do Not** operate an appliance with a leak in the gas train, valves or related piping.

Check burner performance by cycling the system while you observe burner response. Burners should ignite promptly. Flame pattern should be stable, see the "Maintenance Section - Normal Flame Pattern". Turn system off and allow burners to cool, then cycle burners again to ensure proper ignition and flame characteristics.

3 Gas connections *(continued)*

Combination Gas Valves

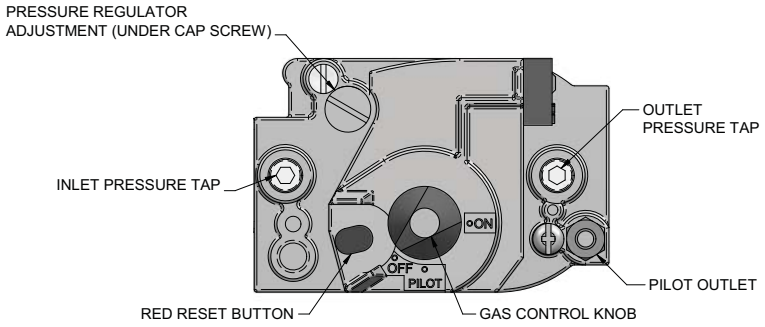

***Figure 3-5**_F1 Gas Valve, standing pilot*

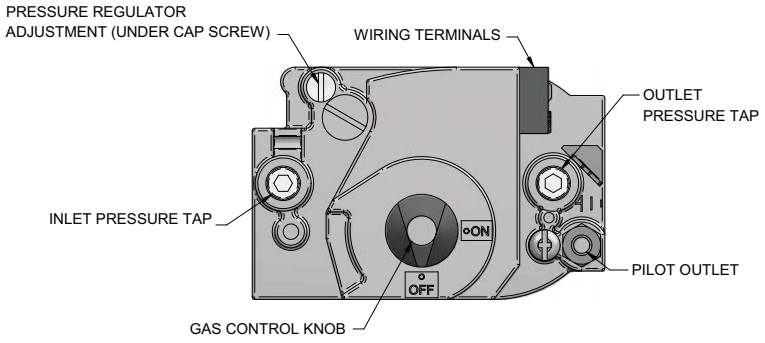

***Figure 3-6**_F9 Gas Valve, spark ignition*

Each unit has a combination gas valve(s) to control the gas supply to the burners. The 500,000 Btu/hr model has two combination gas valves to supply gas to the burners. The combination valve consists of a gas regulator and two valve seats to meet the requirements for redundant gas valves. The valve has a gas control knob that must remain in the open position at all times when the appliance is in service. Each gas valve has pressure taps located on the inlet and outlet sides. Manifold pressure is adjusted using the regulator located on the valve. The manifold pressure is preset at the factory and adjustment is not usually required. If the manifold pressure is to be adjusted, follow the "Gas Manifold Pressure Adjustment Procedure", page 21 for proper adjustment.

Venting of Combination Gas Valves

The combination gas valve regulator used on all models is equipped with an integral vent limiting orifice. The vent limiter ensures that the volume of gas emitted from the valve does not exceed the maximum safe leakage rate allowed by agency requirements. Combination gas valve/regulators equipped with integral vent limiters are not required to have vent or relief lines piped to the outdoors. A dust cap is provided at the vent termination point on the valve to prevent blockage of the vent limiter by foreign material. The combination gas valve regulator with an integral vent limiter complies with the safety code requirements of CSD-1, CF-190(a) as shipped from the manufacturer without the installation of additional vent lines.

Two Stage Burner Control System

The 315,000 through 399,999 Btu/hr boiler models (M9) will be equipped with a two stage gas valve to control high/low burner operation. The 500,000 Btu/hr boiler model achieves two stage burner firing by staging the operation of the two combination gas valves.

4 Hydronic piping

Relief Valve

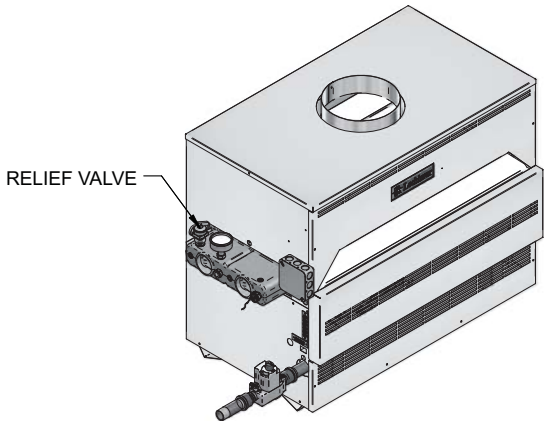

***Figure 4-1**_Relief Valve - CBN315-500*

This appliance is supplied with a relief valve(s) sized in accordance with ASME Boiler and Pressure Vessel Code, Section IV ("Heating Boilers"). The relief valve(s) is mounted directly into the heat exchanger inside the header (see FIG.'s 4-1 and 4-2). To prevent water damage, the discharge from the relief valve shall be piped to a suitable floor drain for disposal when relief occurs. No reducing couplings or other restrictions shall be installed in the discharge line. The discharge line shall allow complete drainage of the valve and line. Relief valves should be manually operated at least once a year.

⚠ CAUTION Avoid contact with hot discharge water.

Water Flow Switch (if equipped)

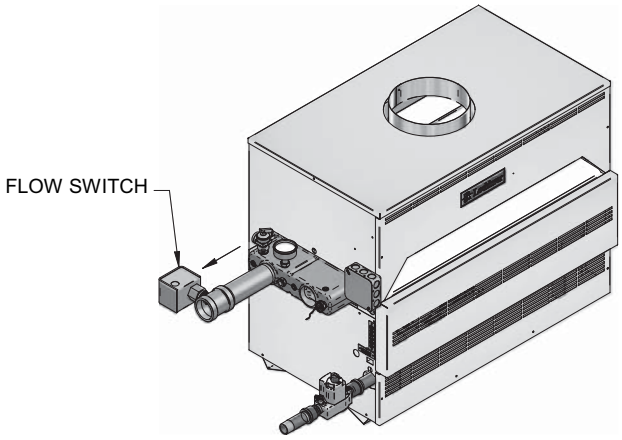

***Figure 4-2**_Water Flow Switch - CBN315-500*

A water flow switch is available as a factory supplied option on all heating boilers and water heaters (see section 7). The flow switch should be wired between terminals X and B. Remove the jumper between the X and B terminals on the terminal strip. This wiring connection installs the flow switch in the 24 VAC safety circuit to prove water flow before main burner ignition. A flow switch installed with the factory supplied minimum adjustment setting requires a specific minimum flow to make the switch and start burner operation. The flow rate required is a function of the diameter of pipe and tee used for installation. Ensure that the pump installed on the boiler will supply adequate flow to make the flow switch contacts and operate the appliance.

4 Hydronic piping *(continued)*

A water flow switch meets most code requirements for a low-water cut off device on boilers requiring forced circulation for operation.

Low Water Cutoff (if equipped)

A hot water boiler installed above radiation level must be provided with a low water cutoff device either as part of the unit or installed at the time the boiler is installed. An electronic low water cutoff is available as a kit on all units. Low water cutoffs should be inspected every six months, including flushing of float types.

TABLE - 4A
MINIMUM REQUIRED FLOW
FOR HEATING BOILER

Input Btu/hr	GPM Flow
315,000	13
360,000	14.9
399,999	16.5
500,000	20.7

NOTICE

Minimum flow is based on a 40°F temperature rise across the boiler. Minimum flow may not prove a flow switch installed in the boiler piping. Use care when operating a boiler at or near the minimum recommended flow because conditions unique to the installation (system pressure, operation of multiple zone valves, glycol, variations in flow, etc.,) may result in overheating of the boiler water causing noise or nuisance operation of safety limit controls. Typical heating boiler applications will operate with a 20°F to 30°F temperature rise across the boiler.

Typical Heating Boiler Installations

General Plumbing Rules

1. Check all local codes.
2. For serviceability of the boiler, always install unions.
3. Always pipe pressure relief valves to an open drain.
4. Locate system air vents at the highest point of the system.
5. Expansion tank must be installed near the boiler and on the suction side of the pump.
6. Support all water piping.

Placing the Boiler in Operation

Filling the System: All air must be purged from the system for proper operation. An air scoop and air vent must be located close to the boiler outlet and there should be a minimum distance between the cold water feed and the system purge valve.

1. Close all drain cocks and air vents.
2. Open the makeup water valve and slowly fill the system.
3. If a makeup water pump is employed, adjust the pressure to provide a minimum of 12 psi at the highest point in the system. If a pressure regulator is also installed in the line, it should be adjusted to the same pressure.
4. Close all valves. Purge one circuit at a time as follows:
   A. Open one circuit drain valve and let the water drain for at least five minutes. Ensure that there are no air bubbles visible in the water stream before closing the drain valve.
   B. Repeat this procedure for each circuit.
5. Open all valves after all circuits have been purged. Make sure there are no system leaks.

NOTICE

Do not use petroleum based stop leak products. All system leaks must be repaired. The constant addition of make-up water can cause damage to the boiler heat exchanger due to scale accumulation. Scale reduces flow and heat transfer, causing overheating of the heat exchanger.

6. Run the system circulating pump for a minimum of 30 minutes with the boiler turned off.
7. Open all strainers in the system and check for debris.
8. Recheck all air vents as described in step 4, General Plumbing Rules.

4 Hydronic piping

9. Inspect the liquid level in the expansion tank. The system must be full and under normal operating pressure to ensure proper water level in the expansion tank. Ensure that diaphragm type expansion tanks are properly charged and not water logged.

10. Start the boiler according to the Section 6 - "Start-Up Instructions" in this manual. Operate the system, including the pump, boiler and radiation units, for one hour.

11. Recheck the water level in the expansion tank. If it exceeds half the tank volume, open the tank to reduce the water level. Recheck pressure charge on diaphragm type tanks.

12. Shut down the entire system and vent all radiation units and high points in the system.

13. Close the water makeup valve and check the strainer and pressure reducing valve for sediment or debris. Reopen the water makeup valve.

14. Verify system pressure with the boiler pressure gauge before beginning regular operation.

15. Within three days of start-up, recheck and bleed all air vents and the expansion tank using these instructions.

Piping of the Boiler System

The drawings in this section (see FIG's 4-4 through 4-6) show typical heating boiler piping installations. Before beginning the installation, consult local codes for specific plumbing requirements. The installation should provide unions and valves at the inlet and outlet of the boiler so it can be isolated for service. The boiler circulating pump, air separator, expansion tank and other components required for proper installation must be purchased locally. An air separation device must be supplied in the installation piping to eliminate trapped air in the system. Locate a system air vent at the highest point in the system. The system must also have a properly sized expansion tank installed. Typically, an air charged diaphragm-type expansion tank is used. The expansion tank must be installed close to the boiler and on the suction side of the system pump to ensure proper operation.

⚠ CAUTION This boiler system should not be operated at less than 12 PSIG.

TABLE - 4B
SYSTEM TEMPERATURE RISE CHART
Based on Boiler Output in Btu/hr

Btu/hr		20°F △T		30°F △T		40°F △T	
Input	Output	GPM	Ft/hd	GPM	Ft/hd	GPM	Ft/hd
315,000	258,300	26.0	4.1	17.3	2.2	13.0	1.3
360,000	295,200	29.7	5.4	19.8	2.5	14.9	1.5
399,999	327,180	--	--	22.0	3.6	16.5	2.0
500,000	410,000	--	--	27.6	6.6	20.7	3.5

4 Hydronic piping *(continued)*

Hot water piping must be supported by suitable hangers or floor stands, NOT by the boiler. Copper pipe systems will be subject to considerable expansion and contraction. Rigid pipe hangers could allow the pipe to slide in the hanger resulting in noise transmitted into the system. Padding is recommended on rigid hangers installed with a copper system. The boiler pressure relief valve must be piped to a suitable floor drain. See the relief valve section on page 24 of this manual.

⚠ CAUTION A leak in a boiler system will cause the system to intake fresh water constantly, which will cause the tubes to accumulate a lime/scale build up. This will cause a **NON-WARRANTABLE FAILURE**.

Water Connections Heating Boilers Only

All water heaters and heating boilers with inputs of 315,000 - 500,000 Btu/hr have 2" NPT.

⚠ CAUTION Field installed reducing bushings may decrease flow resulting in boiler noise or flashing to steam.

Circulator Pump Requirements

This is a low mass, high efficiency hot water boiler which must have adequate flow for quiet, efficient operation. The boiler circulating pump must be purchased locally. The boiler circulator pump must operate continuously while the boiler is firing. Pump selection is critical to achieve proper operation. A pump should be selected to achieve proper system design water temperature rise. A heat exchanger pressure drop chart (Table 4C) is provided to assist in proper pump selection. Also provided is a System Temperature Rise Chart (Table 4B). This table provides GPM and boiler head-loss at various temperature rises for each boiler based on Btu/hr input. Temperature rise is the difference in boiler inlet temperature and boiler outlet temperature while the boiler is firing. **Example:** The boiler inlet temperature is 160°F and the boiler outlet temperature is 180°F, this means that there is a 20°F temperature rise across the boiler.

Circulator Pump Specifications

1. Maximum operating pressure for the pump must exceed system operating pressure.
2. Maximum water temperature should not exceed nameplate rating.
3. Cast iron circulators may be used for closed loop systems.
4. A properly sized expansion tank must be installed near the boiler and located on the suction side of the pump.

TABLE - 4C
HEAT EXCHANGER PRESSURE DROP CHART

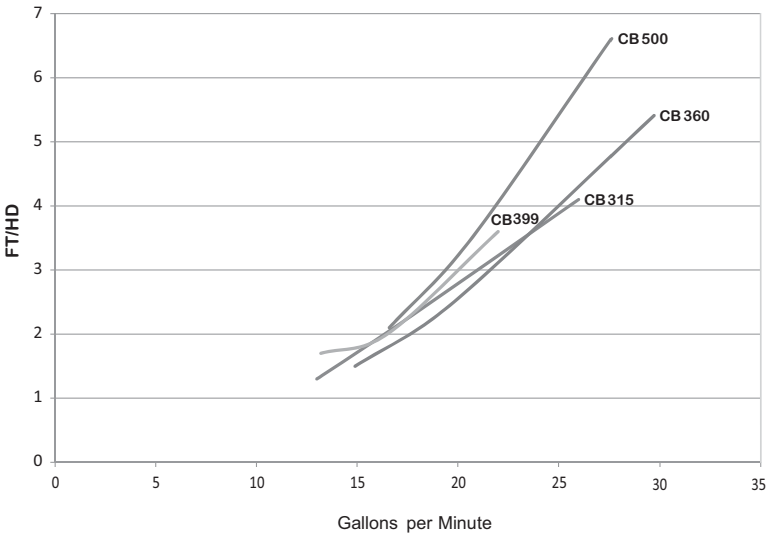

Circulator Pump Operation (Heating Boilers Only)

Boilers are equipped with a relay for controlling the circulation pump for the hot water loop. The relay turns ON and OFF in response to the "W" input from the wall thermostat or zone control.

The field installed boiler pump MUST NOT exceed 1 h.p. For continuous pump operation, wire the system pump to the 120V supply. The pump should be connected at the junction box as shown in FIG. 4-3.

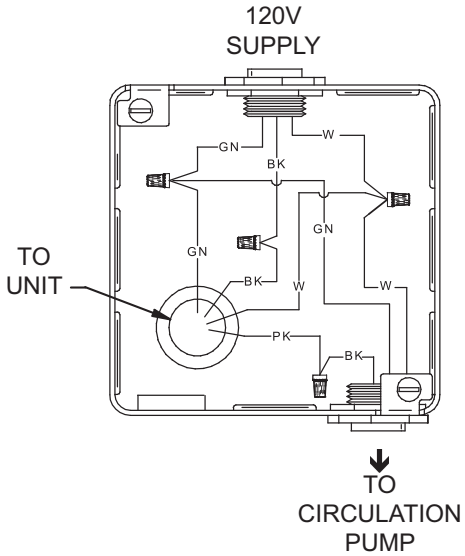

***Figure 4-3_**Boiler Wiring - Circulation Pump to Junction Box*

4 Hydronic piping

PUMP INSTALLATION AND MAINTENANCE: The boiler circulating pump must be purchased locally. For installation and maintenance information on the circulator pump, refer to the pump manufacturers instruction package included with the pump.

Primary/Secondary Boiler Piping

Heating boilers with inputs of 315,000 - 500,000 Btu/hr or larger installed on multiple zone systems are recommended to be installed with a primary/secondary piping system as shown in FIG. 4-4. A primary/secondary piping system uses a dedicated pump to supply flow to the boiler only. This pump is sized based on desired boiler flow rate, heat exchanger head loss and head loss in the secondary system piping only. The secondary pump, installed in the boiler piping, ensures a constant water flow rate to the boiler for proper operation. Boiler installation with a primary/secondary piping system can prevent noise problems caused by low system water flows. A primary/secondary piping system is recommended on any boiler where low water flow conditions may present an operational problem.

A primary/secondary piping system is ideal for systems filled with a propylene glycol and water mixture. A glycol and water mixture is more dense than water only and may result in a lower boiler flow rate. A lower boiler flow may cause noise on operation or short cycling of the burners. A larger secondary pump may be used on a primary/secondary system to provide an increased boiler flow rate. A glycol and water system may require from 10 to 20% more flow to compensate for the increased density of the glycol and its effect on the heat transfer process in the boiler. The exact increase in flow that may be required is based on the type and percentage of glycol added to the boiler system. Consult the manufacturer of the glycol for additional recommendations when using a glycol and water fill for your boiler system.

The installer must ensure that the boiler has adequate flow without excessive temperature rise. The temperature rise on a multiple zone system should be made when only the zone with the longest length and/or highest head loss is open. Low system flow can result in overheating of the boiler water which can cause short burner on cycles, system noise and in extreme cases, a knocking flash to steam. System noise may also indicate an oversized boiler.

⚠ CAUTION At no time should the system pressure be less than 12 PSIG.

NOTICE A boiler operated with an inlet temperature of less than 140°F (60°C) must have a low temperature bypass to prevent problems with condensation. A VAL3048 - 1 1/2" LTV Valve Kit may be used. Follow the piping diagram in FIG. 4-5 to complete installation.

4 Hydronic piping *(continued)*

Low Temperature Bypass Requirements

This piping is like a primary/secondary boiler installation with a bypass in the secondary boiler piping. Inlet water temperatures below 140°F (60°C) can excessively cool the products of combustion resulting in condensation on the heat exchanger and in the flue. Condensation can cause operational problems, bad combustion, sooting, flue gas spillage and reduced service life of the vent system and related components. The bypass allows part of the boiler discharge water to be mixed with the cooler boiler return water to increase the boiler inlet temperature above 140°F (60°C). This should prevent the products of combustion from condensing in most installations. The bypass should be fully sized with a balancing valve to allow for proper adjustment. A valve must also be provided on the boiler discharge, after the bypass. Closing this discharge valve forces water through the bypass. Start boiler adjustment with the bypass valve in the full open position and the boiler discharge valve half open. A small amount of the higher temperature boiler discharge water is mixed with the system water to maintain the desired lower system temperature. A remote low temperature range operator is recommended to control the boiler operation for temperatures lower than 100°F. This remote operator should be wired across the R and W terminals (see *Room Thermostat Connection and Terminal Strip Instructions* in Section 5 of this manual).

Three Way Valves

The installation of a three way valve on this boiler is not generally recommended because most piping methods allow the three way valve to vary flow to the boiler. This boiler is a low mass, high efficiency unit which requires a constant water flow rate for proper operation.

Low flow rates can result in overheating of the boiler water which can cause short burner on cycles, system noise and in extreme cases, a knocking flash to steam. These conditions can cause operational problems and non-warrantable failures of the boiler. If a three way valve must be installed, please pipe in a primary/secondary system. Based on boiler sizing and system flow requirements, this piping may still result in boiler short cycling.

Boiler Flow Rates

⚠ CAUTION The maximum flow rate through the boiler with a copper heat exchanger must not exceed 30 GPM.

The heat exchanger is generally capable of operating within the flow rates of a residential heating system. Should the flow rate exceed the maximum allowable flow rate through the boiler 30 GPM) an external bypass must be installed. The bypass should be fully sized with a balancing valve to allow for proper adjustment of flow. Flow rate can be determined by measuring the temperature rise through the boiler.

The basic guide for minimum flow in this boiler is based on a 40°F temperature rise in most installations. Lower flow and a higher temperature rise is acceptable if the boiler system is specifically designed for the characteristics of a higher temperature rise. A system not specifically designed for a higher temperature rise may experience overheating of the boiler water. This can cause short burner on cycles, system noise and in extreme cases, a knocking flash to steam. These conditions can lead to operational problems and non-warrantable failures of the boiler. High temperature rise systems must be designed by a qualified engineer.

4 Hydronic piping

Primary / Secondary Piping

Figure 4-4_*Primary / Secondary Piping of a Single Boiler*

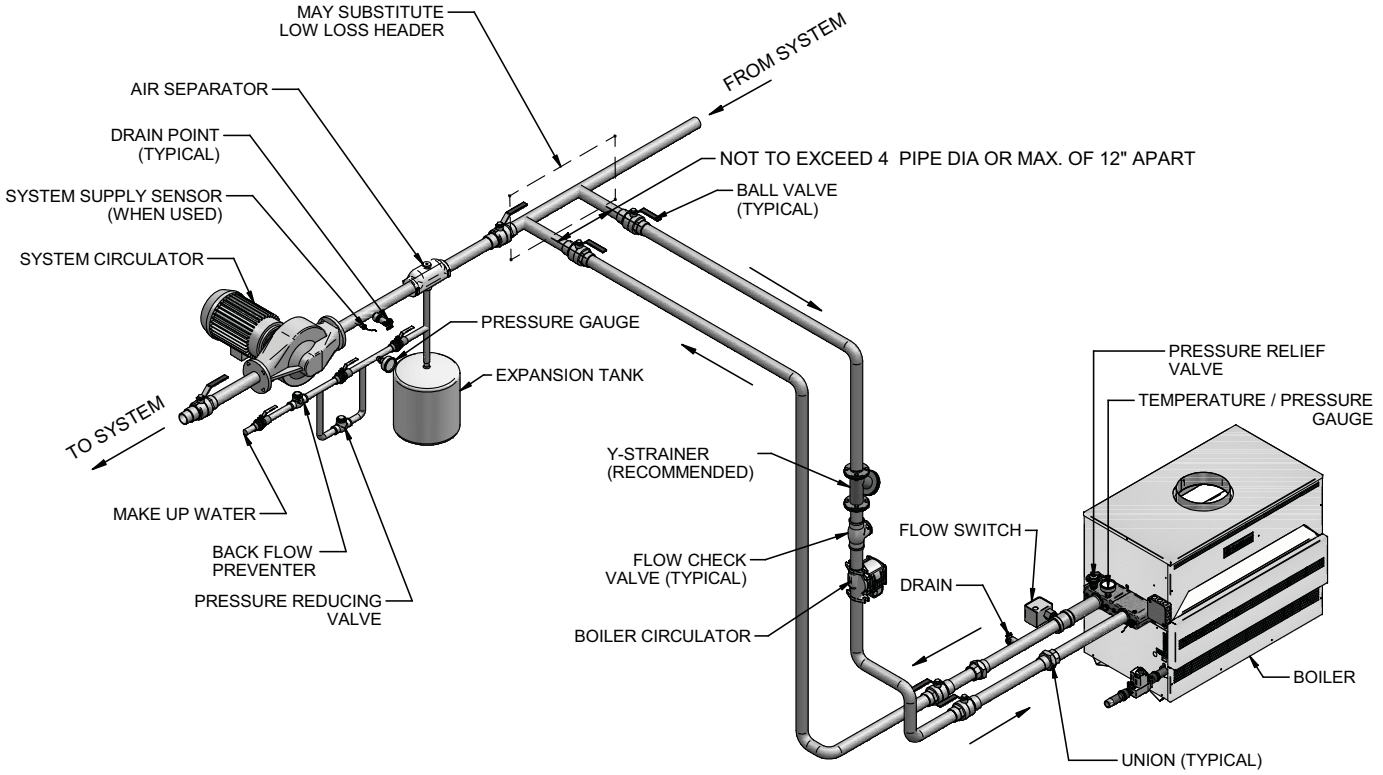

NOTICE Please note that these illustrations are meant to show system piping concept only, the installer is responsible for all equipment and detailing required by local codes.

4 Hydronic piping *(continued)*

Primary / Secondary Piping

Figure 4-5_*Single Boiler - Primary / Secondary with Low Temperature Bypass*

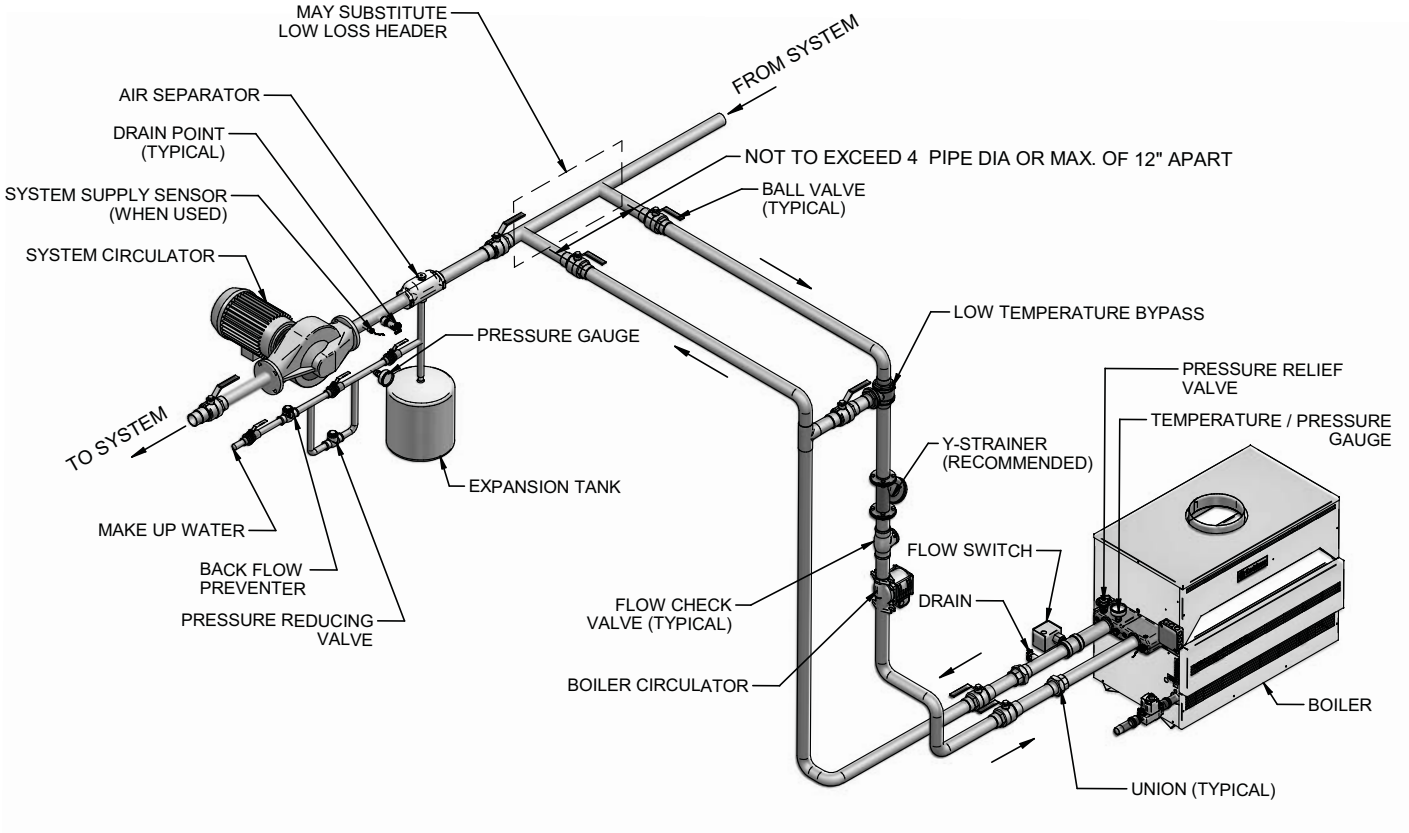

NOTICE Please note that these illustrations are meant to show system piping concept only, the installer is responsible for all equipment and detailing required by local codes.

4 Hydronic piping

Primary / Secondary Piping

Figure 4-8_*Multiple Boilers Zoned with Circulators*

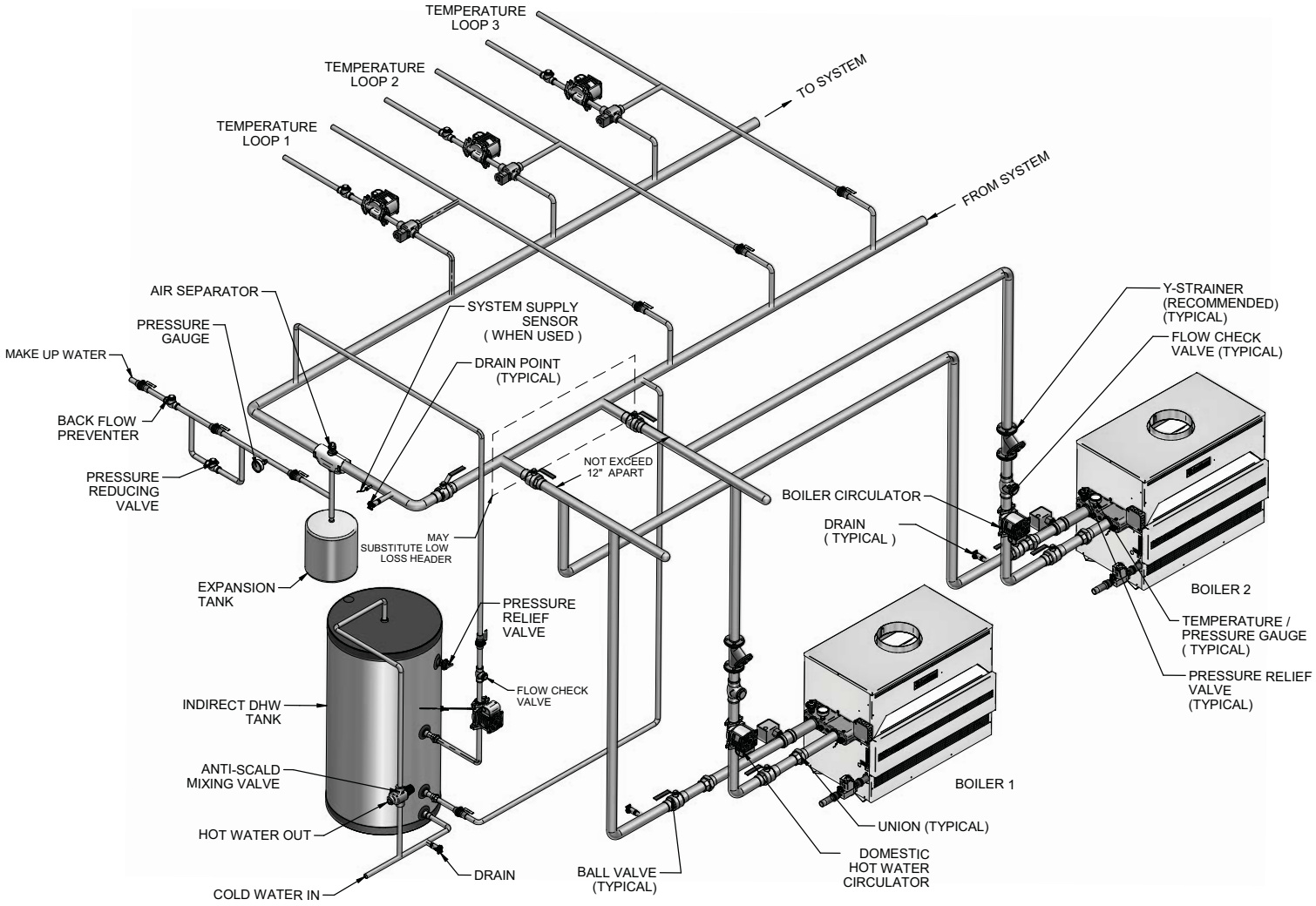

NOTICE Please note that these illustrations are meant to show system piping concept only, the installer is responsible for all equipment and detailing required by local codes.

5 Electrical connections

This appliance is wired for 120 VAC service. The appliance, when installed, must be electrically grounded in accordance with the requirements of the authority having jurisdiction or in the absence of such requirements, with the latest edition of the National Electrical Code ANSI/NFPA No. 70. When the unit is installed in Canada, it must conform to the CSA C22.1, Canadian Electrical Code, Part 1 and/or local Electrical Codes.

1. All wiring between the appliance and field installed devices shall be made with type T wire [63° F(35° C) rise].

2. Line voltage wire exterior to the appliance must be enclosed in approved conduit or approved metal clad cable.

3. The pump must run continuously when the appliance is being fired.

4. To avoid serious damage, DO NOT energize the appliance until the system is full of water. Serious damage may result.

5. Provide the unit with proper overload protection.

6. Install a wall thermostat on the inside wall. DO NOT install the thermostat in an area affected by drafts, sunlight, light fixtures, hot or cold water pipes or near a fireplace. See "*Terminal Strip Connection of a Room Thermostat*" (this page), for proper wiring connection.

Boiler Operating Temperature Control

The operating temperature control is located in the control panel, behind the control panel front access door. The sensing element for the operator is placed in a bulbwell installed in the heat exchanger. Carefully observe the inlet water temperature on the initial boiler on cycles. The exact temperature set point is based on your system's requirements. Turn the control set point dial to the desired operating water temperature. Observe the boiler discharge temperature after each set point adjustment to ensure proper operation.

Room Thermostat or Remote Thermostat Connection to Terminal Strip

A room thermostat or remote temperature control may be connected to the boiler. The room thermostat should be installed on an inside wall, away from the influences of drafts, hot or cold water pipes, lighting fixtures, televisions, sun rays or fireplaces. Follow the manufacturers instructions supplied with the thermostat for proper installation and adjustment. The boiler is equipped with a terminal strip on the left side of the control panel to allow easy connection (FIG. 5-1).

Remove the jumper between the R and W terminals on the terminal strip. Refer to the chart in this section (Table 5A) to determine maximum allowable length and wire gauge recommended to connect the switching contacts of the room thermostat to the R and W terminals on the terminal strip. Connection to the terminal strip will allow the room thermostat to make and break the 24 VAC boiler control circuit turning the boiler on and off based on the room ambient temperature requirements. Set the boiler operating temperature control as described in this section.

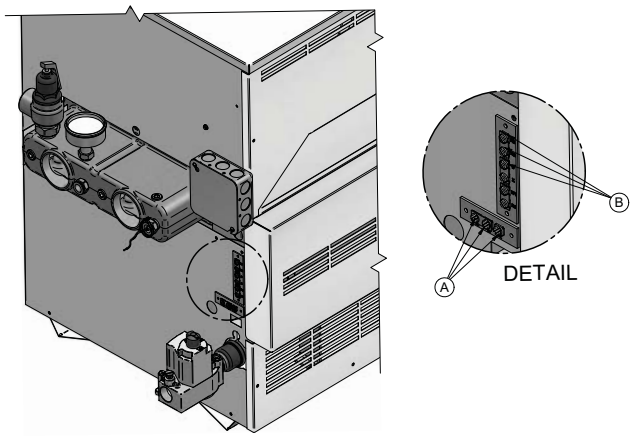

Figure 5-1_*Terminal Strip Connections*

TABLE - 5A
TERMINAL STRIP WIRING

Wire Gauge Allowable Length	Maximum
12 GA	100 ft.
14 GA	75 ft.
16 GA	50 ft.
18 GA	30 ft.

Power Venter Connection to Terminal Strip

A terminal connection strip is provided for ease of connection for Power Venting Systems, see FIG. 5-1, inset A.

A field supplied powered venter or powered louver/damper may be connected to the boiler via a terminal strip located on the left side of the unit, see FIG. 5-1, inset B.

A 24 VAC relay can be powered from this location when a call for heat has been established. A proving switch can be interlocked back to the appliance to ensure its operation before the appliance is allowed to fire.

Reference the wiring diagrams on pages 63 through 66 of this manual.

5 Electrical connections

Pump Wiring for a Heating Boiler

The heating boiler circulating pump must be purchased locally. The maximum load for the pump switched by the internal pump relay must not exceed 1 HP. The current draw for a field installed 120 VAC pump MUST be added to the boiler's current draw to determine the minimum wire size for 120 volt service.

TABLE - 5B
AMP DRAW DATA FOR STANDARD FIRING CODES

Firing Control	Model	Maximum Total AMPs / 120VAC
M9	CB 315	.5
	CB 360	.5
	CB 399	.5
	CB 500	.5
*F1	CW 90	1.5
	CW 135	1.5
	CW 180	1.5
	CW 199	1.5
	CW 225	1.5
	CW 270	1.5
*F9	CW 315	1.5
	CW 360	1.5
	CW 399	1.5
	CW 500	1.5

** 1.0 AMPs added for "PM" water heaters*

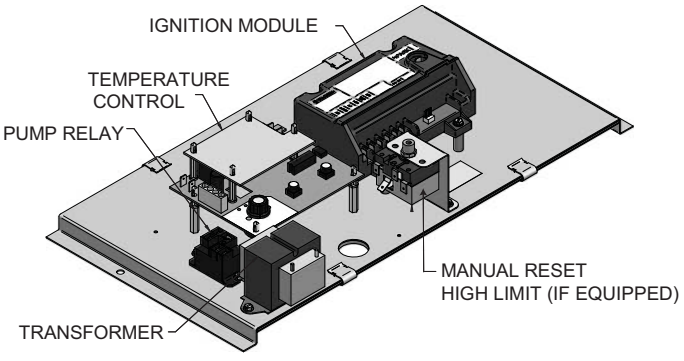

***Figure 5-2**_Control Panel Assembly 90-135,000 BTU/hr*

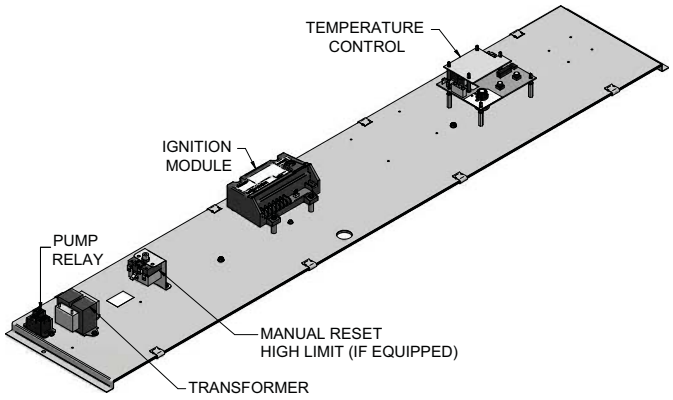

***Figure 5-3**_Intermittent Pilot System 500,000 Btu/hr Control Panel*

Temperature Adjustment

Operating Temperature Control

NOTICE

The temperature controller is pre-set at the factory with test settings. You may need to adjust the settings to meet your specific needs.

⚠ WARNING

Return water temperatures must not be less than 140°F. If lower return water temperatures are required, follow the instructions for *Low Temperature Bypass Requirements* or *Three-Way Valves*, see page 29.

5 Electrical connections *(continued)*

Locating Temperature Control

Remove the control panel door on the front of the unit in order to locate and access the temperature control.

Temperature Control Settings

Remove the control panel door on the front of the unit unless your unit is specified as a boiler only with an outdoor air reset option. If your unit is a boiler only with an outdoor air reset option, there are additional controls for this option. They are explained under *Outdoor Air Reset Option*, page 37.

The three setting knobs on the temperature control are for Set point, Differential, and High-Fire Offset (see FIG. 5-4).

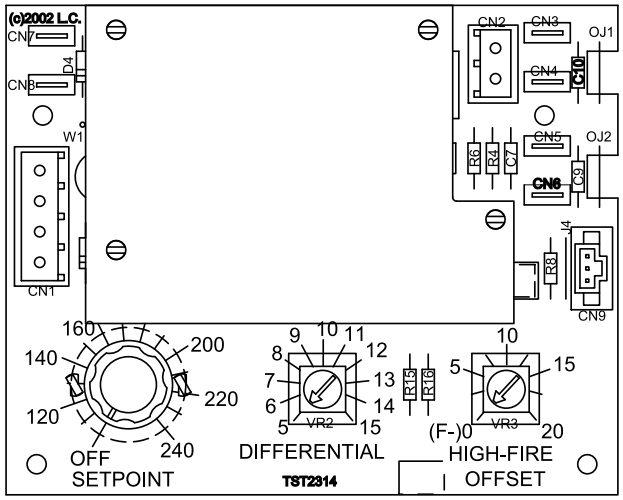

Figure 5-4_*Temperature Control*

Maximum Set Point Determination

The maximum set point for the control is factory set. Boilers can be set to 240°F max., water heaters are set to 190°F max., and specialty state and local codes to 200°F.

These maximum set points are established by cutting the OJ1 and OJ2 jumpers located on the right side of the temperature controller. The maximum set point is determined as shown below in Table 5C.

TABLE - 5C
MAXIMUM SET POINT DETERMINATION

OJ1	OJ2	MAX. SET POINT
Connected	Connected	240°F
Cut	Connected	190°F
Connected	Cut	200°F
Cut	Cut	160°F

NOTICE

Anytime that OJ1 is the only jumper cut, a new overlay is required under the Set Point knob on the temperature controller because the scale has changed to a maximum of 190°F.

Anytime the OJ2 jumper is cut (with or without OJ1), a new overlay is required under the Set Point knob on the temperature controller because the scale has changed to a maximum of 200°F.

Set Point

The Set Point knob specifies the target inlet (or system sensor, if used) water temperature in degrees, Fahrenheit. After the water temperature reaches the set point, the temperature control shuts off the burners.

Differential

The Differential specifies the number of degrees below the set point that the control will allow the water temperature to drop before it brings the unit back on again.

High-Fire Offset

The temperature control operates a two-stage firing system. The two stages are High-Fire and Low-Fire. High-Fire operates all burners at full rate while Low-Fire operates the burners at approximately one-half rate.

The High-Fire Offset knob specifies the number of degrees below set point that the High-Fire stage shuts down. At that point, the unit will continue to operate at the Low-Fire stage until the set point is reached.

The High-Fire Offset knob has settings between 0°F and 20°F. If set at 0°F, the High-Fire Offset is disabled and the unit will operate the High-Fire stage until the set point is reached and the temperature control shuts the unit off.

If the High Fire Offset knob is set to 0 or 1, the delay will be 10 seconds; if set to 2 or above the delay will be 120 seconds.

Boiler Application

Standard boiler units are equipped with one inlet water temperature sensor. An optional sensor is also provided for use as a remote system sensor. Boilers with the outdoor air reset option also have an outside air temperature sensor.

Water Heater Application

Water heater units are shipped with an inlet water temperature sensor and a multi-purpose temperature sensor to be used as a tank sensor. The inlet water temperature sensor is factory installed on all water heaters.

5 Electrical connections

Temperature Control Sensors

This is a two-stage temperature control (M9/F9) that controls the burner ignition and pump functions. This temperature controller can measure up to three different sensor inputs, depending upon how the unit is set up. They are as follows:

1. Inlet Water Temperature Sensor
2. Multi-Purpose Temperature Sensor
3. Outside Air Temperature Sensor

Inlet Water Temperature Sensor

This sensor measures the inlet water temperature coming into the unit.

The inlet water temperature sensor is placed into the inlet bulbwell on the boiler. This sensor is installed by the factory.

Multi-Purpose Temperature Sensor

Depending upon how your unit is set up, this sensor can be used as a system sensor in a boiler system or a tank sensor for water heater applications. Connect this sensor to the two blue wires in the upper left-hand corner of the control panel.

Outdoor Air Temperature Sensor

The outside air temperature sensor will only be used for boiler systems. The outside air sensor is optional. This sensor allows you to tie boiler operation to the outdoor air temperature. As outside temperatures drop, the control will increase the temperature setting of the boiler. As outdoor temperatures rise, the control will decrease the temperature to the selected set point of the boiler. You can set the control to shut the boiler off when a desired outdoor air temperature level is reached.

You must purchase the sensor from the appliance manufacturer. The sensor comes with a housing that helps protect the sensor from the elements. Mount the air sensor housing outdoors, under the eve of the roof. Make sure the housing is out of direct sunlight. This will ensure that the sensor will accurately read the true outdoor temperature. Connect the outdoor air temperature sensor to the terminal block on the outdoor air reset board. For more information on wiring the sensor, see *Wiring of Remote Sensors*, this page.

Installation of Remote Sensors

Make sure to insert the sensor all the way into the bulbwell, leaving no air pocket between the front surface of the sensor and the back of the bulbwell. Air pockets are thermally non-conductive and will cause sensors to read inaccurately.

System Sensor

The system sensor must be installed when piping the boiler in Primary - Secondary fashion when using the Pump Delay option.

Tank Sensor

Water heaters are provided with an extra temperature sensor that MUST be field installed. The sensor is shipped loose in the I & O packet. This remote mounted sensor will be the primary temperature sensor which will inform the appliance's built-in thermostat control. For domestic water heating, the sensor MUST be installed into a bulbwell on the storage tank. This is required to maintain the desired temperature in the tank and reduce cycling of the heater.

In both applications be sure to insert the sensor all the way into the bulbwell, leaving no air pockets between the front surface of the sensor and the back of the bulbwell. Air pockets are thermally non-conductive and will cause sensors to read inaccurately.

Wiring of Remote Sensors

To wire remote sensors, follow the guidelines below. Take care to correctly wire sensors to the unit. Erratic temperature readings can be caused by poor wiring practices. Twist the wires between the unit and the remote sensor. Turn wires at least three or four turns per linear foot of wiring. This provides protection against some types of electrical interferences.

1. Do not route temperature sensor wiring with building power wiring.
2. Do not locate temperature sensor wiring next to control contactors.
3. Do not locate temperature sensor wiring near electric motors.
4. Do not locate temperature sensor wiring near welding equipment.
5. Make sure good mechanical connections are made to the sensor, any interconnecting wiring and the controller.
6. Do not mount sensor with leadwire end pointing up in an area where condensation can occur.
7. Use shielded wiring to connect the sensor to the control when the possibility of an electrically noisy environment exists. Shielded cable is recommended on all cable runs of more than 25 feet in length.

NOTICE

Ground the cable shield at the connection to the boiler temperature control only. Do not ground the shielded cable at the sensor end.

To maintain temperature accuracy, sensor wires should be 18 AWG two conductor (18/2). Use shielded wire if required.

5 Electrical connections *(continued)*

Installation of a Remote Sensor (Boiler Application)

1. Turn OFF the main electrical power and the main manual gas shutoff to the appliance.
2. Remove the side access panel from the appliance to gain access to the thermostat.
3. Locate the sensor in the kit. Determine the location of the remote sensor and measure the amount of wire needed to connect the sensor to the thermostat. See *Wiring of Remote Sensors* on page 36 for guidelines.
4. Use twisted pair wire, minimum 18 gauge or larger. See Table 5A, page 33 regarding distance versus wire gauge. Ensure all wire insulation is trimmed to reveal at least 3/8" of exposed wire.
5. Connect the measured wire to the sensor wire using wire caps (see FIG. 5-5). Install .250 x .032 insulated female quick connect terminals to the end of the wires. Feed the wires through the access hole located on the back of the unit and secure the connectors to the thermostat connections (Sys/Tank) CN5 and CN6 located in the upper right-hand of the thermostat.
6. Turn on the electrical power and the main manual gas shutoff to the appliance.
7. Replace the side access panel.
8. Fire the appliance and resume operation.

Installation of a Tank Sensor (Water Heater Application)

1. Turn OFF the main electrical power and the main manual gas shutoff to the appliance.
2. Remove the side access panel from the appliance to gain access to the wire harness.
3. Locate the two blue wires with a tag notating the remote thermostat sensor. Feed the blue wires through the access hole located on the back of the unit.

   NOTE: It will be necessary to add additional wire to reach from the appliance to the remote water source. Use twisted pair wire, minimum 18 gauge or larger. See Table 5A, page 33 regarding distance versus wire gauge. Ensure all wire insulation is trimmed to reveal at least 3/8" of exposed wire.
4. Connect the wires to the sensor wire using wire caps.
5. Turn on the electrical power and the main manual gas shutoff to the appliance.
6. Replace the side access panel.
7. Fire the appliance and resume operation.

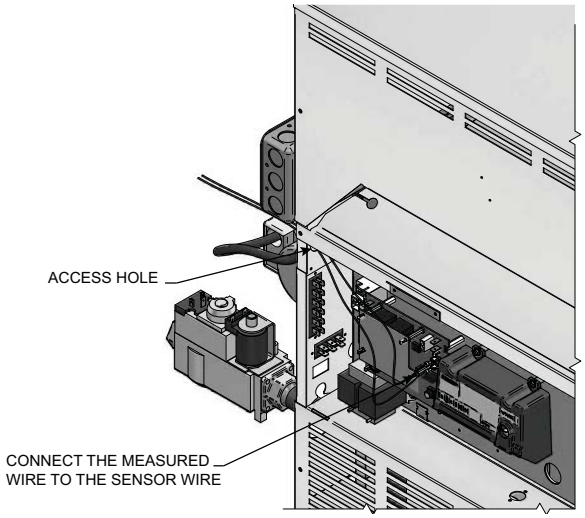

***Figure 5-5**_Installation of Remote Sensors*

Outdoor Air Reset Option

For boilers ordered with the Outdoor Air Reset option, there is an additional control (FIG. 5-6). There are three setting knobs for Shutdown, Outdoor Air Max., and Ratio. There is also a switch to turn the outdoor air shutdown feature On or Off. An O.A. Sensor is also included.

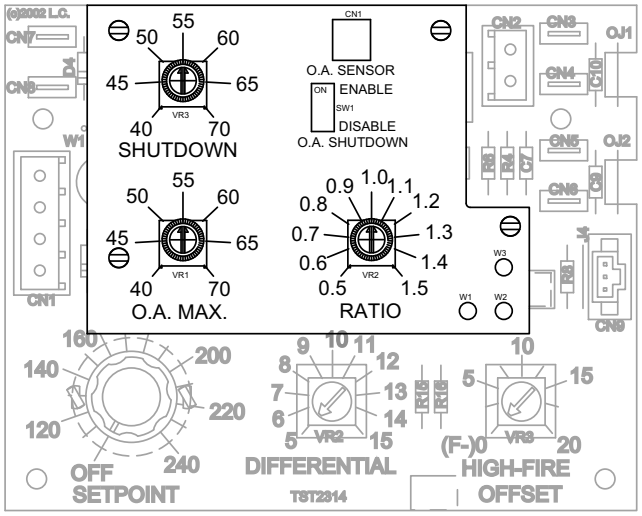

***Figure 5-6**_Optional Outdoor Air Reset Control*

5 Electrical connections

Shutdown

The Shutdown knob specifies the outdoor air lockout temperature at which the control would prevent the unit from operating.

Outdoor Air Max (O.A. Max)

The O.A. Max knob allows a reset up to the maximum outdoor air temperature specified by this knob setting. When the outdoor air temperature is above the specified setting, the unit will not function in the O.A. Reset Mode, but will continue to run at the selected set point temperature.

Note that the set point knob will now indicate the "minimum" boiler temperature. Target temperature is determined by the ratio and outdoor air temperature below the O.A. Max setting.

Ratio

The Ratio knob allows control over the reset ratio to be used during Outdoor Air Reset. The allowable ratios are as low as 0.5:1 or as high as 1.5:1.

Selecting the 0.5:1 ratio will increase the set point 0.5° for every 1.0° drop in outdoor air temperature up to the maximum set point temperature.

Selecting the 1.5:1 ratio will increase the set point 1.5° for every 1.0° drop in outdoor air temperature up to the maximum set point temperature.

If the outdoor design and boiler design temperatures are known, the Ratio setting can be calculated using the following formula:

$$\text{Ratio} = \frac{\text{(boiler design temperature - operator set point)}}{\text{(O.A. Max. setting - outdoor design temperature)}}$$

Note that the reset set point cannot exceed the maximum set point of the boiler thermostat.

These settings are illustrated graphically in FIG. 5-7.

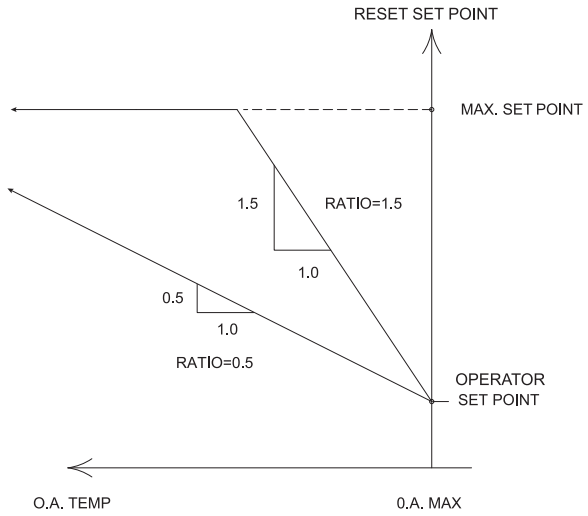

Figure 5-7_*Outdoor Air Control Example Chart*

Outdoor Air Shutdown Enable/Disable Switch

The Outdoor Air Shutdown Enable/Disable switch turns the outdoor air shutdown feature On and Off. Disabling the Outdoor Air Shutdown feature allows the unit to operate regardless of the outdoor air temperature. This is needed for indirect domestic hot water systems for example.

Additional Temperature Controls

High Water Temperature Limit Control

The appliance is supplied with a fixed setting, auto-reset high water temperature limit control. The setting of this control limits maximum discharge water temperature. If water temperature exceeds the setting, the limit will break the control circuit and shut down the appliance. The limit control will only be reset after the water temperature has cooled well below the setting of the limit. The auto-reset high water temperature limit control is mounted in the outlet side of the front header.

5 Electrical connections *(continued)*

Manual Reset High Water Temperature Limit Control
(Standard Fixed Settings on Boilers and Water Heaters with Optional Adjustable Settings)

Water heaters are supplied with a fixed setting, manual reset high water temperature limit control. This manual reset temperature limit control has a fixed limit setting of 230°F (110°C). If water temperature exceeds this setting, the limit will break the control circuit and shut down the unit. The limit control can only be reset after the water temperature has cooled well below the setting of the limit. Reset of the limit control is accomplished by pushing the **Red Reset Button (Manual Reset High Limit)** (see FIG.'s 5-2 and 5-3 on page 34) located on the front side of the control panel. A label on the control panel indicates the exact location of the manual reset high water temperature limit control.

Blocked Vent and Flame Roll-Out / Flame Interlock Switch

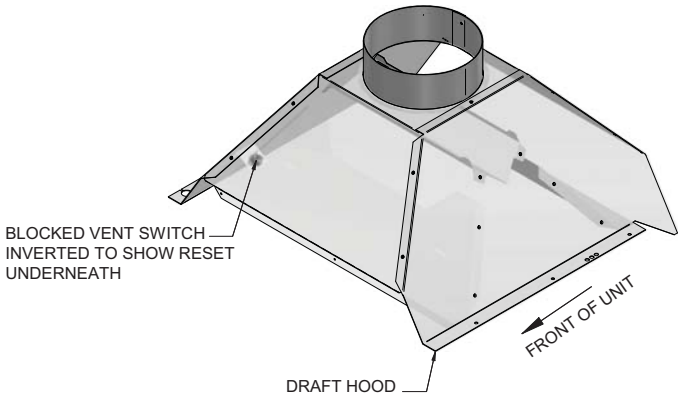

***Figure 5-8**_Blocked Vent Switch Location*

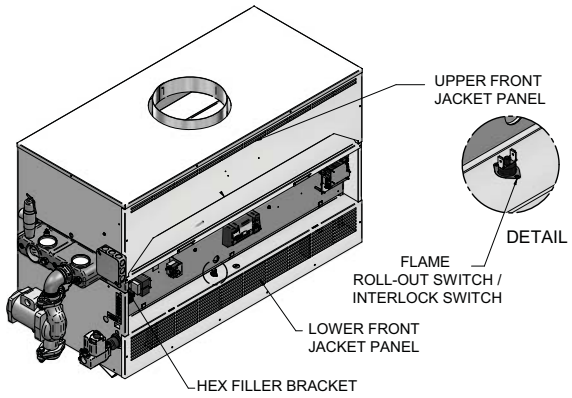

***Figure 5-9**_Flame Roll-Out / Flame Interlock Switch Location*

All units are equipped with manual reset blocked vent and flame roll-out / flame interlock switches. These temperature switches are located in the controls compartment and in the relief opening of the boiler's built-in draft hood. Each switch has a red reset button. In the event the system has actuated to shut off the main burner gas supply, wait for the boiler to cool, then press the red reset to return the boiler to operation. Operation of a blocked vent and/or flame roll-out / interlock switch usually indicates a problem with the venting system, obstruction of the heat exchanger flue gas passageway and/or a combustion air supply problem. The cause for operation of the blocked vent and/or flame roll-out / interlock switch must be determined and corrected. If the boiler cannot be restored to normal operation, contact a qualified service installer, service agency or the gas supplier.

6 Start-up

Initial Start-up

Follow the Lighting Instructions on the label applied to the appliance.

A. On water heaters and boilers with the system pump delay option, the operating temperature control will energize the pump relay which energizes the pump on a call for heat. The operating temperature control will de-energize the pump relay approximately 30 seconds after the call for heat ends. If either the inlet sensor or the optional multi-purpose temperature sensor reads below 40°F, the pump relay will turn ON. When the temperature rises above 50°F the pump relay will turn OFF.

On boilers, the pump will operate whenever the "W" terminal is energized.

B. Location - The appliance should be located within a room having a temperature safely above freezing [32°F(0°C)].

C. Shutdown and Draining - If, for any reason, the appliance is shut off, the following precautionary measures must be taken:

1. Shut off gas supply,
2. Shut off water supply.
3. Shut off electrical supply.
4. Drain the heat exchanger completely. Remove one 3/8" NPT plug or bulbwell from the inlet side and one from the outlet side of the front header of the heat exchanger.
5. Drain the pump. Remove the 3/4" plug in the bypass loop.

Pre-start Checklist

1. Inspect the burners to be sure they are properly aligned.
2. Inspect the pilot gas line, thermocouple leads, ignition leads and wire connections to the gas valve to be sure none were damaged during shipment.
3. Check to ensure that gas connections have been made properly and the gas line is purged of air.
4. Check to ensure that water connections are tight and the appliance and piping system have been properly filled.
5. Ensure that discharge from the relief valve has been piped to a floor drain.
6. Verify that properly sized combustion and ventilation air openings are provided and not obstructed in any way.
7. Check carefully for gas leaks.
8. Read the appliance's safety warnings, lighting instructions and check out procedure carefully, before firing the system.

Lighting Instructions for Standing Pilot Models (F1) Models 90,000 through 270,000 Btu/hr Input

FOR YOUR SAFETY READ BEFORE OPERATING

⚠ WARNING If you do not follow these instructions exactly, a fire or explosion may result causing property damage, personal injury or loss of life.

A. This appliance has a pilot which must be ignited by hand. When lighting the pilot, follow these instructions exactly.

B. **BEFORE OPERATING**, smell around the appliance area for gas. Be sure to smell next to the floor because some gas is heavier than air and will settle to the floor.

WHAT TO DO IF YOU SMELL GAS

Do not try to light any appliance.

Do not touch any electric switch; do not use any phone in your building.

Immediately call your gas supplier from a near by phone. Follow the gas supplier's instructions.

If you cannot reach your gas supplier, call the fire department.

C. Use only your hand to push in or turn the gas control knob. Never use tools. If the knob will not turn by hand, don't try to repair it, call a qualified service technician. Force or attempted repair may result in a fire or explosion.

D. Do not use this appliance if any part has been under water. Immediately call a qualified service technician to inspect the appliance. The possible damage to a flooded appliance can be extensive and present numerous safety hazards. Any appliance that has been under water must be replaced.

6 Start-up *(continued)*

Lighting Instructions

1. STOP! Read the safety information (page 40).
2. Remove the control panel door.
3. Set the thermostat to the lowest setting (OFF).
4. Turn off all electrical power to the appliance.
5. Turn the gas control knob on the gas valve clockwise to the "OFF" position.

Figure 6-1_*Gas Valve 90,000 - 270,000 Btu/hr Models*

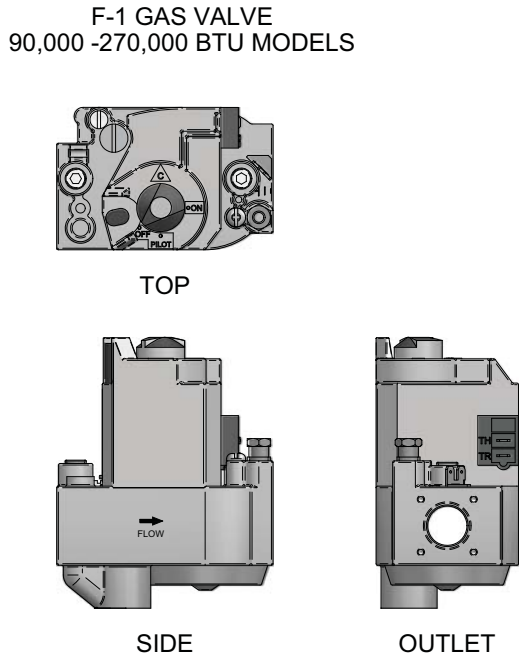

6. Wait five (5) minutes to clear out any gas, then smell for gas, including near the floor. If you smell gas, STOP! Follow the steps in the"*What To Do If You Smell Gas*" section in the safety information on page 40. If you do not smell gas go on to the next step.
7. Remove the lower panel door to gain access to the pilot.
8. Find the pilot - Follow the metal tube from the gas valve to the pilot. The pilot is located on the right side of the burner approximately centered in the burner tray.

Figure 6-2_*Pilot Location*

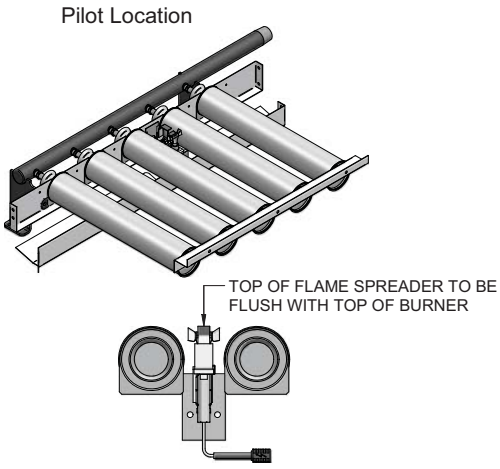

9. Turn the control knob on the gas valve counterclockwise to the "PILOT" position.

Figure 6-3_*Lighting Wand*

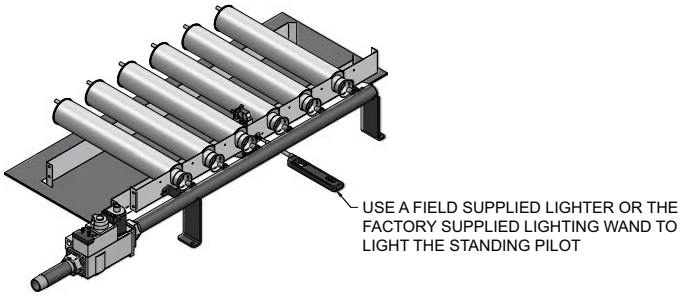

NOTICE

The information package shipped with the appliance contains a wire lighting wand. The loop end of the wand will hold a match. The wand extends your reach to the pilot and makes lighting the pilot easier (see FIG. 6-3).

6 Start-up

10. Use the loop end of the wire lighting wand, shipped with the instruction package, to hold the match and reach the pilot. An access slot is provided in the lower front jacket panel, beside the burner, to insert the lighting wand and match to the pilot. Lift the pilot cover (FIG. 6-3) to access the pilot. Push down and hold in the red button on the gas valve. This should start gas flow to the pilot. Continue to hold the red button in for about one (1) minute after the pilot is lit. Release the button and it will pop back up. The pilot should remain lit. If the pilot goes out, repeat steps 5 through 10.

    If the red button does not pop up when released, stop and immediately call your gas supplier.

    If the pilot will not stay lit after several tries, turn the gas control to "OFF" and call your service technician or gas supplier.

11. Turn the gas control knob on the gas valve counterclockwise to the "ON" position.

12. Turn on all electric power to the appliance.

13. Re-install the lower panel door.

14. Set the thermostat to the desired setting.

15. Re-install the control panel door.

TO TURN OFF GAS TO APPLIANCE

1. Set the thermostat to the OFF position.

2. Turn off all electric power to the appliance if service is to be performed.

3. Turn the gas control knob on the gas valve clockwise to the "OFF" position. Do not force.

⚠ WARNING Should overheating occur or the gas fail to shut off, turn off the external manual gas valve to the appliance.

Safety Shutoff Test For Standing Pilot Ignition System

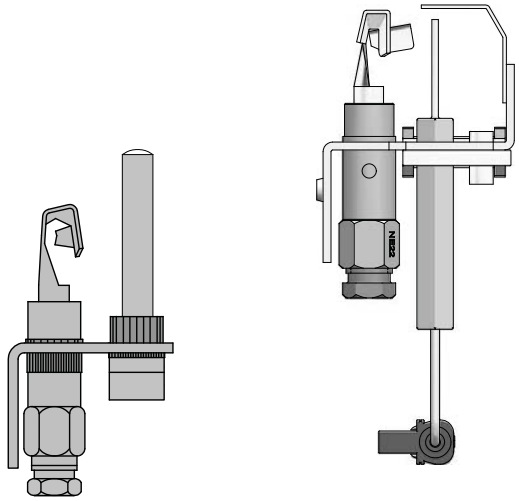

PILOT WITH THERMOCOUPLE PILOT WITH SPARK IGNITION

***Figure 6-4**_Pilot with Thermocouple and Spark Ignition*

1. With the main burners on and firing, unscrew the thermocouple connection from the gas valve (FIG. 6-4) and remove from the fitting.

2. The main gas valve should extinguish the burners immediately after removal of the thermocouple.

3. If burners do not extinguish, immediately follow steps in "*To Turn Off Gas To Appliance*".

4. Immediately call a qualified serviceman or installer to repair an ignition system that fails to operate properly and shut down the burners.

5. After successful completion of test, turn the control knob on the gas valve clockwise to the "OFF" position. Do not force.

6. Carefully reconnect the thermocouple to the gas valve.

7. Follow the Lighting Instructions to relight the pilot and establish normal operation.

6 Start-up *(continued)*

Lighting Instructions for Spark Ignition Pilot Models (F9/M9) Models 90,000 through 500,000 Btu/hr Input

FOR YOUR SAFETY READ BEFORE OPERATING

⚠ WARNING If you do not follow these instructions exactly, a fire or explosion may result causing property damage, personal injury or loss of life.

A. This appliance is equipped with an ignition device which automatically lights the pilot. Do not try to light the pilot by hand.

B. **BEFORE OPERATING**, smell around the appliance area for gas. Be sure to smell next to the floor because some gas is heavier than air and will settle to the floor.

WHAT TO DO IF YOU SMELL GAS

Do not try to light any appliance.

Do not touch any electric switch; do not use any phone in your building.

Immediately call your gas supplier from a nearby phone. Follow the gas supplier's instructions.

If you cannot reach your gas supplier, call the fire department.

C. Use only your hand to turn the gas control knob. Never use tools. If the knob will not turn by hand, don't try to repair it, call a qualified service technician. Force or attempted repair may result in a fire or explosion.

D. Do not use this appliance if any part has been under water. Immediately call a qualified service technician to inspect the appliance. The possible damage to a flooded appliance can be extensive and present numerous safety hazards. Any appliance that has been under water must be replaced.

Operating Instructions

1. STOP! Read the safety information first.
2. Remove the control panel door.
3. Set the thermostat to the lowest setting (OFF).
4. Turn off all electrical power to the appliance.
5. This appliance is equipped with an ignition device which automatically lights the pilot. DO NOT try to light the pilot by hand.

6a. 90,000 - 135,000 and 399,999 - 500,000 Btu/hr models, rotate the gas control knob on the gas valve clockwise to the "OFF" position.

6b. 180,000 - 360,000 Btu/hr models, rotate the gas control knob on the gas valve clockwise to the line on the collar around the knob. Depress the knob and continue rotation to the "OFF" position.

7. Wait five (5) minutes to clear out any gas, then smell for gas, including near the floor. If you smell gas, STOP! Follow the steps in the "*What To Do If You Smell Gas*" section in the safety information, this page. If you do not smell gas go on to the next step.

8a. 90,000 - 135,000 and 399,999 - 500,000 Btu/hr models, rotate the gas control knob on the gas valve counterclockwise to the "ON" position.

8b. 180,000 - 360,000 Btu/hr models, rotate the gas control knob on the gas valve counterclockwise to the line on the collar around the knob. Allow the knob to "pop" up, and continue rotation to the "ON" position.

9. Turn on all electric power to the appliance.
10. Set the thermostat to the desired setting.
11. Re-install the control panel door.
12. If the appliance will not operate, follow the instructions "*To Turn Off Gas To Appliance*" and call your service technician or gas supplier.

6 Start-up

To Turn Off Gas to Appliance

1. Set the thermostat to the OFF position.
2. Turn off all electric power to the appliance if service is to be performed.

3a. 90,000 - 135,000 and 399,999 - 500,000 Btu/hr models, rotate the gas control knob on the gas valve clockwise to the "OFF" position. Do not force.

3b. 180,000 - 360,000 Btu/hr models, rotate the gas control knob on the gas valve clockwise to the line on the collar around the knob. Depress the knob and continue rotation to the "OFF" position. Do not force.

⚠ WARNING Should overheating occur or the gas fail to shut off, turn off the external manual gas valve to the appliance.

Safety Shutoff Test for Spark Ignition Pilot System

1. Turn "OFF" gas supply to the appliance.
2. Turn thermostat to highest setting.
3. Turn electric power "ON".
4. Pump relay pulls in to start pump.
5. The ignition will begin sparking at the pilot.
6. The ignition module will lock out after the 90 second trial for ignition period on the 90,000 through 399,999 Btu/hr models and after the 15 second trial for ignition period on the 500,000 Btu/hr model.
7. Immediately call a qualified serviceman or installer to repair an ignition system that fails to lock out and properly shut down burner operation.
8. After successful completion of the test, readjust the thermostat to normal setting.
9. Turn "ON" gas supply.
10. Turn power "OFF" then "ON" to reset ignition module.
11. If ignition system fails to operate properly, repair work must be performed by a qualified serviceman or installer.

Intermittent Pilot Spark Ignition System (F9/M9)

The ignition module is not repairable. Any modification or repairs will invalidate the warranty and may create hazardous conditions that result in property damage, personal injury, fire, explosion and/or toxic gases. A faulty ignition module must be replaced with a new module.

Ignition and Control Timings

F1 Standing Pilot Models (thermocouple supervised)
Pilot Flame Failure Response Time - 180 Seconds Maximum

F9 Intermittent Spark Ignition Pilot Models
Pilot Trial for Ignition Period - 90 Seconds (90,000 through 399,999 Btu/hr models)

Pilot Trial for Ignition Period - 15 Seconds (500,000 Btu/hr model)

Pilot Failure Response Time - 0.8 Seconds at less than 1.0 μA flame current

Pump Delay Timing (Standard on Water Heaters and Optional on Boilers) - 30 Seconds after burner shutdown

Freeze Protection

1. For water heaters and boilers that utilize the pump delay option, if either the inlet sensor or the optional multi-purpose temperature sensor reads below 40°F, the pump relay will turn ON. When the temperature rises above 50°F the pump relay will turn OFF.
2. Location - Heating boilers and water heaters must be located in a room having a temperature safely above freezing [32°F(0°C)].
3. Caution - A room where the appliance is installed and operating under a negative pressure may experience a downdraft in the flue of an appliance which is not firing. The cold outside air pulled down the flue may freeze a heat exchanger. This condition must be corrected to provide adequate freeze protection.
4. Freeze protection for a heating boiler or hot water supply boiler using an indirect coil can be provided by using hydronic system antifreeze. Follow the manufacturers instructions. **DO NOT** use undiluted or automotive type antifreeze.
5. A snow screen should be installed to prevent snow and ice accumulation around the appliance venting system in cold climates.

6 Start-up *(continued)*

6. Shut-down and Draining - If for any reason, the appliance is to be shut off, the following precautionary measures must be taken:

   (a) Shut off gas supply.

   (b) Shut off water supply.

   (c) Shut off electrical supply.

   (d) Drain the unit completely. Remove one threaded plug or bulbwell from the inlet side of the front header and one from the outlet side of the front header on the heat exchanger. Blow all water out of the heat exchanger.

   (e) Drain pump and piping.

Freeze Protection for a Heating Boiler System (if required)

1. Use only properly diluted inhibited glycol antifreeze designed for hydronic systems. **Inhibited propylene glycol is recommended** for systems where incidental contact with drinking water is possible.

⚠ CAUTION DO NOT use undiluted or automotive type antifreeze.

2. A solution of 50% propylene glycol will provide maximum protection of approximately -30°F.

3. Follow the instructions from the glycol antifreeze manufacturer. The quantity of glycol antifreeze required is based on total system volume including expansion tank volume.

4. Glycol is more dense than water and changes the viscosity of the system. The addition of glycol will decrease heat transfer and increase frictional loss in the heating boiler and related piping. A larger pump with more capacity may be required to maintain desired flow rates in a glycol system.

5. Local codes may require a back flow preventer or actual disconnect from city water supply when glycol antifreeze is added to the system.

Water Treatment

In hard water areas, water treatment should be used to reduce the introduction of minerals to the system. Minerals in the water can collect in the heat exchanger tubes and cause noise on operation. Excessive build up of minerals in the heat exchanger can cause a non-warrantable failure.

7 Domestic water heaters

Domestic Water Heaters 90,000 - 500,000 Btu/hr Models

This section applies only to those units used to supply direct fired domestic hot water and installed with a storage tank(s). The use of a properly sized pump and the control of water velocity, as explained in the *Water Velocity Control* section, are important for correct operation of your hot water heater.

This section contains specific instructions for those units used to supply domestic hot water. All warnings, cautions, notes and instructions in the general installation and service sections apply to these instructions. Water heaters are designed for installation with a storage tank. The use of a properly sized pump and the control of water velocity, as explained below, is important for correct operation of your water heater.

Water Velocity Control

IMPORTANT - To ensure proper velocity through the heat exchanger, it is necessary to regulate the temperature rise across the heat exchanger from inlet to outlet. This must be done on initial installation and periodically rechecked. With the correct temperature rise across the heat exchanger, you may be assured of the proper velocity in the tubes. This will yield long life and economical operation from your water heater. Excessive lime build-up in the tube is a result of too little velocity in the tubes. Excessive pitting or erosion in the tube is caused by too much velocity through the tubes. Care should be taken to measure temperature rise and maintain a velocity as follows:

1. The pump must run continuously when the burners are firing.
2. With the pump running and the water heater off, the inlet and outlet thermometers should read the same temperatures. If they do not, an adjustment must be made to your final calculation.
3. Turn the water heater on and allow time for the temperature to stabilize. Record the difference between the inlet and outlet temperatures. This difference will be the "temperature rise."
4. Compare the temperature rise on the heater with the required temperature rise in Table 7A. Should adjustment be needed, proceed as follows:

If the temperature rise is too high, the water velocity is too low. Check the following:

1. Check for restrictions in the outlet of the water heater.
2. Be sure all valves are open between the water heater and the tank.
3. Check the pump to be sure it is running properly and that the pump motor is running in the proper direction.
4. Be sure the circulation pipes between the water heater and storage tank are not less than 2" diameter for a single unit installation.
5. Common manifold piping for multiple unit installations will require larger minimum pipe sizes to tank tappings to ensure proper flow. See Table 7B on page 47.
6. Multiple unit installations may also require a larger circulating pump to achieve the specified flow against the increased head loss of multiple unit common manifold piping.

If the temperature rise is too low, the water velocity is too high. Adjust as follows:

1. Slowly throttle the valve on the outlet side of the water heater until the temperature rise is steady at the required temperature rise as noted in Table 7A.
2. Sustained high water velocity and low temperature rise may result in pitting or erosion of the copper tubes in the heat exchanger. This is a non-warrantable failure. Temperature rise must be properly adjusted to achieve the specified flow rate.

Required Temperature Rise

Temperature rise is based on the hardness of the potable water to be heated. The temperature rise specified is for water with a hardness of 5 to 25 grains per gallon. The total dissolved solids shall not exceed 350 ppm.

TABLE - 7A
REQUIRED TEMPERATURE RISE

Btu/hr INPUT	Flow Rate GPM	Temperature Rise °F
90,000	30	5
135,000	30	7
180,000	30	10
199,999	30	11
225,000	30	12
270,000	30	15
315,000	30	17
360,000	30	20
399,999	30	22
500,000	30	28

7 Domestic water heaters *(continued)*

Water Chemistry

The required temperature rise and the standard pump sizing are based on the heating of potable water with chemistry within the specified limits. Caution should be used when heating water softened to less than 5 grains per gallon. Many commercial water softeners reduce hardness to 0 grains which may result in long term problems in the system. Softened water will usually have a lower pH which can be aggressive and corrosive causing non-warrantable damage to the heater, pump, and associated piping.

Corrosion due to water chemistry generally shows up first in the hot water system because heated water increases the rate of corrosive chemical reactions. As water is heated it becomes less soluble. The dissolved minerals and solids will precipitate and collect as scale if water velocity is not properly controlled. Follow the temperature rise requirements for unsoftened water. Consult the manufacturer when heating potable water with hardness or total dissolved solids exceeding these specifications. Heating of high hardness and/or high total dissolved solids water may require a larger circulating pump, an optional cupro-nickel heat exchanger and a revised temperature rise specification based on the water chemistry of the water to be heated.

Softened Water Systems

Decreasing the flow rate will reduce the erosion process, however the heat exchanger should be monitored to ensure the scale/liming process is not made worse. The unit should be placed on a comprehensive inspection schedule until optimum flow rates can be established. Problematic water areas may require heat exchanger inspection every two weeks. The total scale accumulation should never exceed the thickness of a piece of paper. Should scale accumulation exceed this thickness the flow rate will need to be increased. The tubes should not have a bright shiny copper look. This would indicate that the erosion process has begun and the flow rate will need to be decreased. Once the proper flow rates have been established the inspection intervals can be increased to every 30 days, once a quarter, or to a bi-annual inspection. This procedure should ensure proper operation of the unit as long as the water quality stays consistent.

TABLE - 7B
COMMON WATER MANIFOLD SIZE FOR MULTIPLE HOT WATER SUPPLY BOILER INSTALLATIONS

Pipe sizing chart provides minimum pipe size for common manifold piping and tank tappings to ensure adequate flow.

Number of Units	Common Manifold Size (Min.)
1	2"
2	2"
3	2 1/2"
4	3"
5	3 1/2"
6	3 1/2"

Pump Operation

1. The water heater/hot water supply boiler must be connected to a properly sized pump that circulates water between the heater and storage tank.
2. A standard water heater is furnished with a 1/6 HP, 120 VAC, 3.6 AMP circulating pump to be mounted on the units inlet water connection. This pump is sized based on installation of a single storage tank and heater in close proximity. If the number of fittings and straight pipe exceeds the quantities shown in this section, a larger pump will be required.
3. The pump must run continuously when the burners are firing.
4. Lubricate the pump to the manufacturers recommendations. Pump damage due to inadequate lubrication is non-warrantable.
5. Pump is sized to heater input and water hardness. Care should be taken to size the pump correctly. See "*Water Chemistry*", this page.

The standard pump selection is based on the following pipe and fittings from the unit to the storage tank:

6 - 90° elbows 2 - ball valves
2 - unions 1 - cold water tee

Plus the following length of straight pipe based on the heater size:

90,000 through 360,000 Btu/hr Models
Not more than 45 feet of straight pipe

399,999 through 500,000 Btu/hr Models
Not more than 25 feet of straight pipe

For every elbow and tee in excess of those shown above, DEDUCT 5 FEET from maximum allowable straight pipe in heater to tank circulating loop.

7 Domestic water heaters

Figure 7-1_*Single water heater_single tank*

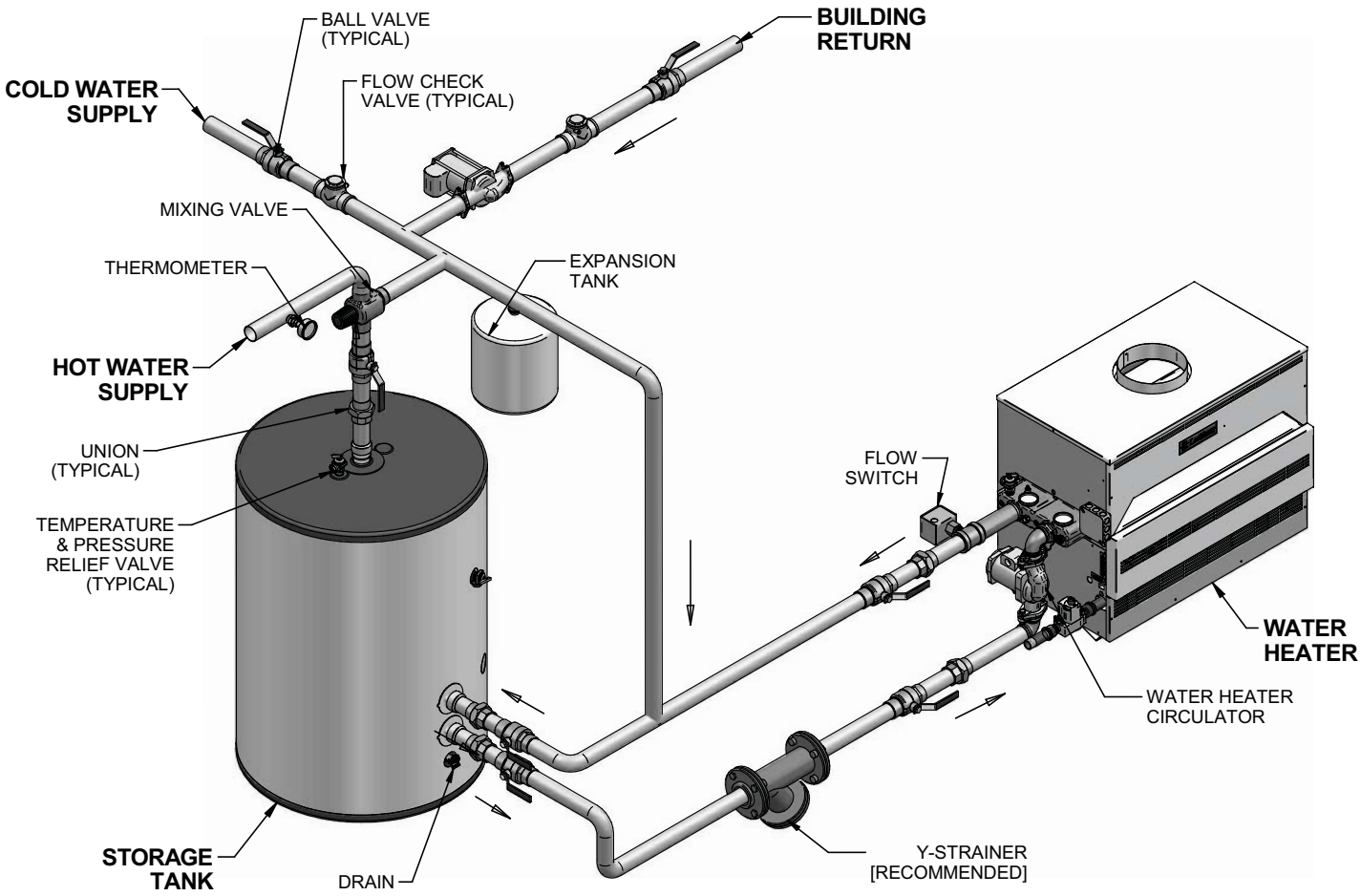

NOTICE Please note that these illustrations are meant to show system piping concept only, the installer is responsible for all equipment and detailing required by local codes.

7 Domestic water heaters *(continued)*

Figure 7-2_*Single water heater_multiple tank*

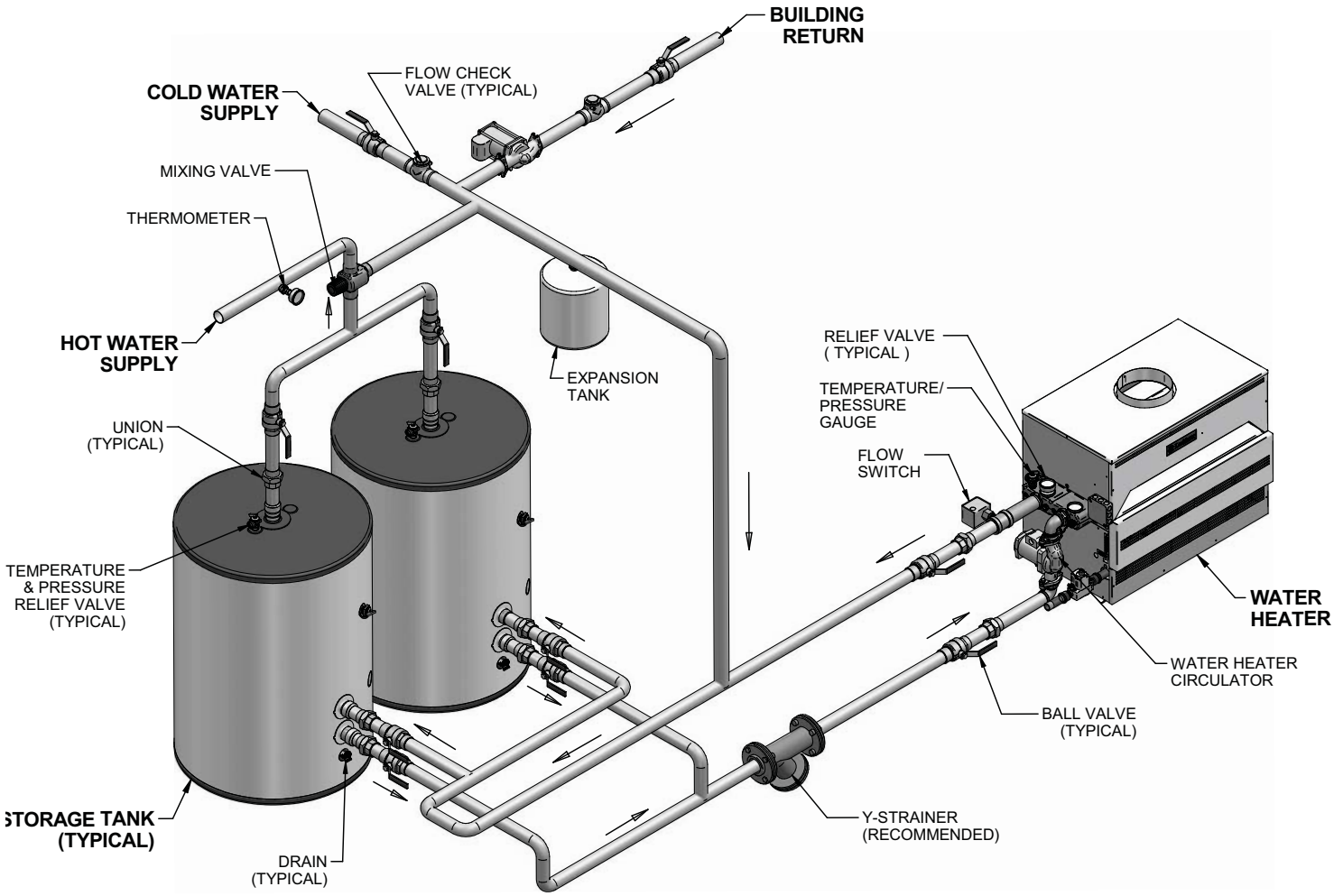

NOTICE Please note that these illustrations are meant to show system piping concept only, the installer is responsible for all equipment and detailing required by local codes.

7 Domestic water heaters

***Figure 7-3**_Multiple water heater_single tank*

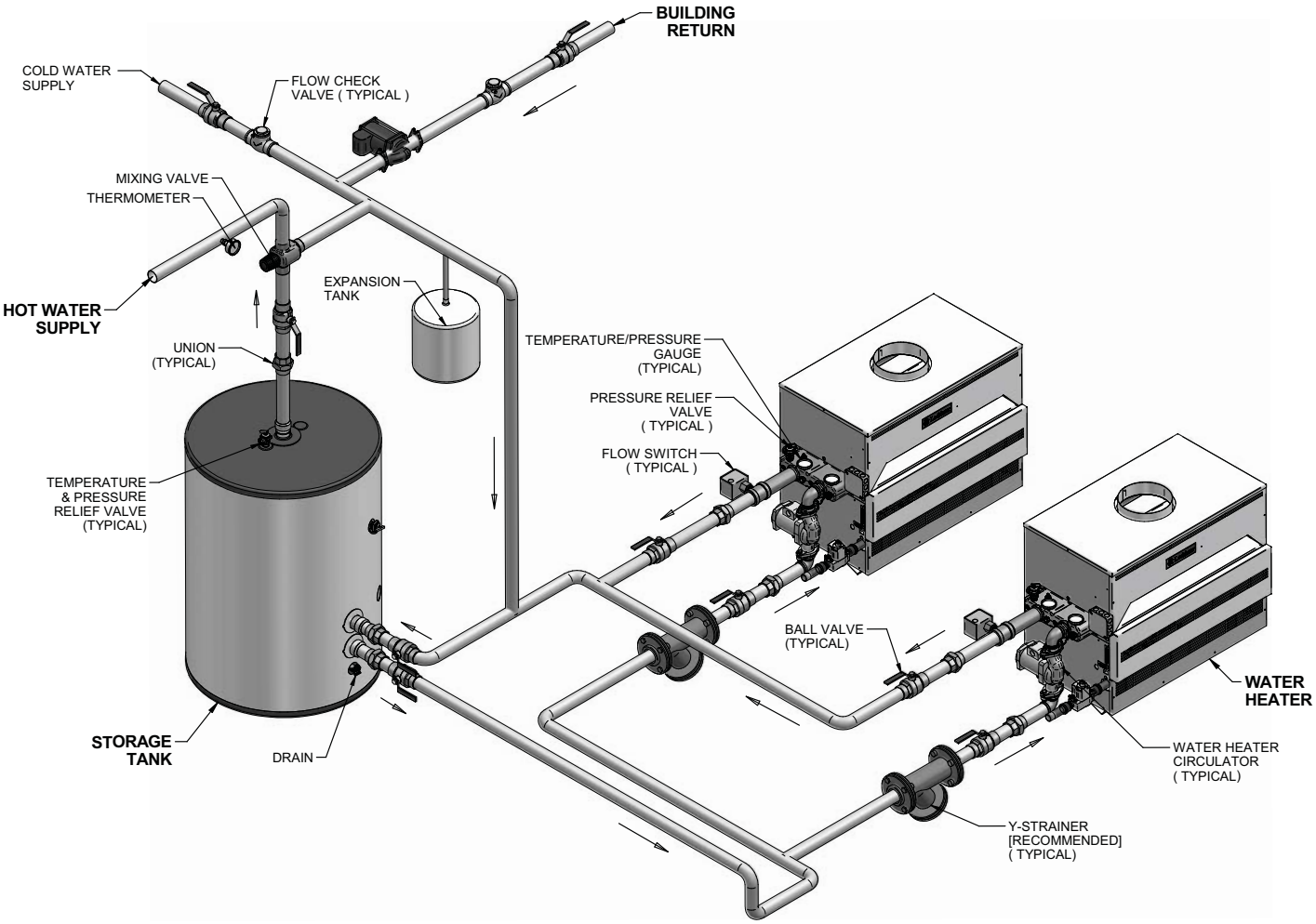

NOTICE

Please note that these illustrations are meant to show system piping concept only, the installer is responsible for all equipment and detailing required by local codes.

7 Domestic water heaters *(continued)*

Minimum Pump Performance

Based on heating potable water with a hardness of 8 to 25 grains per gallon and total dissolved solids not exceeding 350 ppm. See "*Water Chemistry*", page 47.

BTU/hr INPUT	GPM	Ft. Hd.
90,000 - 500,000	30	8

Remote Sensor Installation

Water heaters are provided with an extra temperature sensor that MUST BE field installed. The sensor is shipped loose in the I & O packet. This remote mounted sensor will be the primary temperature sensor which will inform the appliance's built-in thermostat control. For domestic water heating, the sensor MUST BE installed into a bulbwell on the storage tank. This is required to maintain the desired temperature in the tank and reduce cycling of the heater.

The sensor must also be connected to two blue wires provided in the upper left-hand corner of the control panel. It will be necessary to add additional wire to reach from the appliance to the remote water source. Use twisted pair wire, minimum 18 gauge or larger. See Table 5A, page 33 regarding distance versus wire gauge.

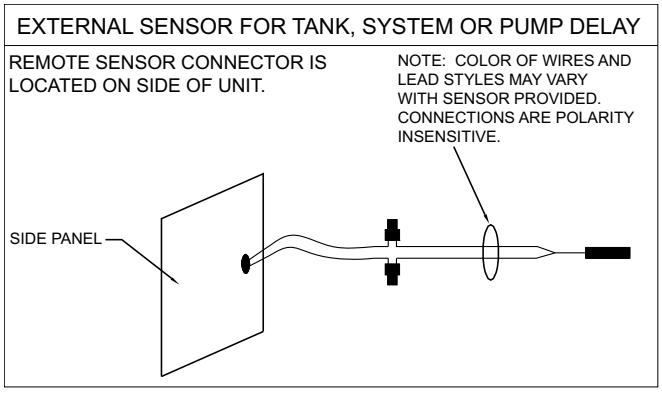

***Figure 7-4**_External Sensor for Tank, System or Pump Delay*

Heat Exchanger

This is a highly sophisticated heat exchanger, designed to carry water in such a way that it generates a scouring action which keeps all interior surfaces free from build-up of impurities. The straight-line, two pass design of the tubes sends water into the headers at a properly rated velocity. The configuration of the headers, in turn, creates a high degree of turbulence which is sufficient to keep all contaminants in suspension. This "scouring action" provides greater cost savings for owners. Tubes are always able to transfer heat at peak efficiency. Every surface within this water containing section is of a nonferrous material, providing clear, clean, rust-free hot water. Straight copper tubes-finned on the outside for maximum heat transfer glass lined cast iron one piece cored headers make up an entirely rustproof unit. On all models, header inspection plugs can be removed for field inspection and cleaning of copper tubes. The entire heat exchanger may be easily removed from the unit.

Thermostat Settings

1. The thermostat is adjusted to a low test setting when shipped from the factory.
2. Set the thermostat to a maximum water temperature of 125°F which will satisfy hot water demands and prevent risk of scald injury.

   Households with small children or invalids may require 120°F or lower temperature setting to reduce risk of scald injury. Some states may require a lower temperature setting. Check with your gas supplier for local requirements governing the temperature setting. Remember, no water heating system will provide exact temperature at all times. Allow a few days of operation at this setting to determine the correct temperature setting consistent with your needs.

NOTICE (1) This water heater, when set at the lower temperature setting, is not capable of producing hot water of sufficient temperature for sanitizing purposes. (2) Higher stored water temperature increases the ability of the water heater to supply desired quantities of hot water, however remember:

⚠ CAUTION Hotter water increases the risk of scald injury.

Incorrect piping of the cold water supply to the system may result in excessive low temperature operation causing condensate formation on the heat exchanger and operational problems. The cold water supply piping must be installed in the discharge piping from the heater to the storage tank. This allows the cold water to be tempered in the storage tank before entering the heater. See typical installation drawings provided in this manual. Higher water temperatures reduce condensate formation.

7 Domestic water heaters

⚠ CAUTION Setting the temperature selector to higher settings provides hotter water, which increases the risk of scald injury.

The manufacturer recommends the use of a properly sized thermostatic mixing valve to supply domestic hot water at temperatures less than 140°F. Storing the water at a higher temperature and thermostatically mixing the water will increase the available quantity of mixed hot water, greatly reduce the possibility of condensate formation on the heat exchanger and help prevent the growth of water born bacteria. Adequate care MUST be taken to prevent potential scald injury when storing water at 140°F and hotter.

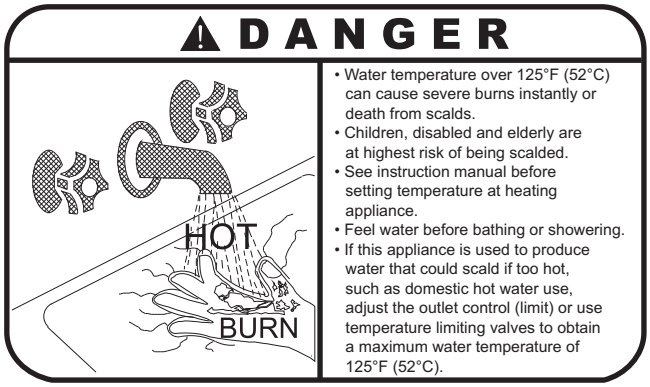

Figure 7-5_*Danger Warning*

⚠ WARNING Should overheating occur or the gas supply fail to shut off, **DO NOT** turn off or disconnect the electrical supply to the pump. Instead, shut off the gas supply at a location external to the appliance.

7 Domestic water heaters *(continued)*

Relief Valve

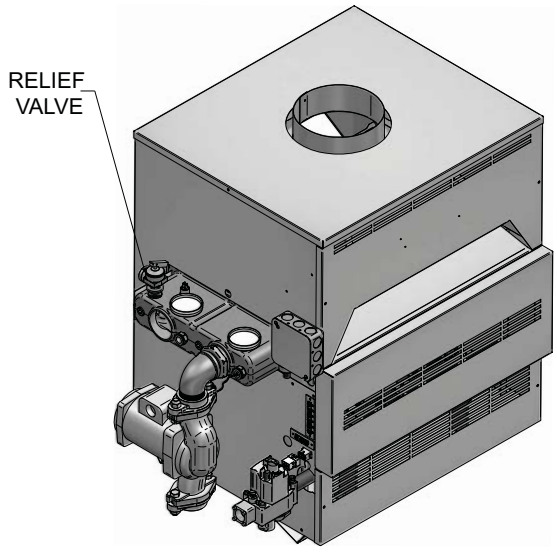

***Figure 7-8**_Relief Valve - Water heater*

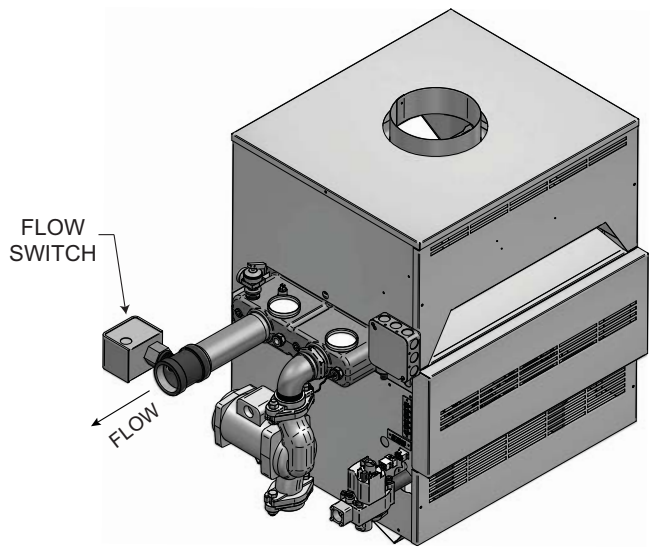

***Figure 7-9**_Water Flow Switch, Water heater*

This appliance is supplied with a relief valve sized in accordance with ASME Boiler and Pressure Vessel Code, Section IV ("Heating Boilers"). The relief valve is mounted directly into the heat exchanger inside the header (see FIG.'s 7-8 and 7-9). To prevent water damage, the discharge from the relief valve shall be piped to a suitable floor drain for disposal when relief occurs. No reducing couplings or other restrictions shall be installed in the discharge line. The discharge line shall allow complete drainage of the valve and line. Relief valves should be manually operated at least once a year.

⚠ CAUTION Avoid contact with hot discharge water.

Water Flow Switch (if equipped)

A water flow switch is available as a factory supplied option on all water heaters. The flow switch should be wired between terminals X and B. Remove the jumper between the X and B terminals on the terminal strip. This wiring connection installs the flow switch in the 24 VAC safety circuit to prove water flow before main burner ignition. A flow switch installed with the factory supplied minimum adjustment setting requires a specific minimum flow to make the switch and start burner operation. The flow rate required is a function of the diameter of pipe and tee used for installation. Ensure that the pump installed water heater will supply adequate flow to make the flow switch contacts and operate the water heater.

Pressure Only Relief Valve

This water heater/hot water supply boiler is normally supplied with a temperature and pressure relief valve sized in accordance with applicable codes. Units may be supplied with an optional pressure only relief valve. When a water heater/hot water supply boiler equipped with this optional relief valve is piped to a separate storage vessel, the storage vessel must have a properly installed temperature and pressure relief valve which complies with local codes.

Thermal Expansion

A relief valve which discharges periodically may be due to thermal expansion in a closed system. A hot water supply boiler installed in a closed system, such as one with a backflow preventer or check valve installed in the cold water supply, shall be provided with means to control expansion. Contact the water supplier or local plumbing inspector on how to correct this situation. Do not plug or cap the relief valve discharge!

Cathodic Protection

Hydrogen gas can be produced in a hot water system that has not been used for a long period of time (generally two weeks or more). **Hydrogen gas is extremely flammable.** To prevent the possibility of injury under these conditions, we recommend the hot water faucet be open for several minutes at the kitchen sink before you use any electrical appliance which is connected to the hot water system. If hydrogen is present, there will be an unusual sound such as air escaping through the pipe as the hot water begins to flow. There should be no smoking or open flames near the faucet at the time it is open.

8 Maintenance and annual startup

***Table 8A**_Service and Maintenance Schedules*

Service technician (see the following pages for instructions)	
Annual Startup	**General:** • Address reported problems • Inspect interior; clean and vacuum if necessary; • Check for leaks (water, gas, flue) • Examine venting system • Check system water pressure/system piping/expansion tank • Check control settings • Check wiring and connections • Flame inspection (stable, uniform) • Check flue gas passageways • Inspect and clean the burner • Perform start-up checkout and performance verification per *Section 6 - Start-up*. **If combustion or performance indicate need:** • Clean heat exchanger • Remove and wash burner

Owner maintenance (see the User's Information Manual for instructions)	
Daily	• Check appliance area • Check pressure/temperature gauge
Monthly	• Check vent piping • Check relief valve
Periodically	• Test low water cutoff (if used) • Reset button (low water cutoff)
Every 6 months	• Check appliance piping (gas and water) for leaks • Operate relief valve
End of season months	• Shut appliance down (unless boiler used for domestic hot water)

8 Maintenance *(continued)*

⚠ WARNING Follow the service and maintenance procedures given throughout this manual and in component literature shipped with the appliance. Failure to perform the service and maintenance could result in damage to the appliance or system. Failure to follow the directions in this manual and component literature could result in severe personal injury, death, or substantial property damage.

⚠ WARNING The appliance should be inspected annually only by a qualified service technician. In addition, the maintenance and care of the appliance designated in Table 8A and explained on the following pages must be performed to assure maximum appliance efficiency and reliability. Failure to service and maintain the appliance and system could result in equipment failure.

⚠ WARNING Electrical shock hazard – Turn off power to the appliance before any service operation on the appliance except as noted otherwise in this instruction manual. Failure to turn off electrical power could result in electrical shock, causing severe personal injury or death.

⚠ CAUTION Label all wires prior to disconnection when servicing controls. Wiring errors can cause improper and dangerous operation.

Address reported problems

1. Inspect any problems reported by the owner and correct before proceeding.

Inspect appliance area

1. Verify that appliance area is free of any combustible materials, gasoline and other flammable vapors and liquids.

Inspect appliance interior

1. Remove the outer access panels and inspect the interior of the appliance.
2. Vacuum any sediment from inside the appliance and components. Remove any obstructions.

Check all piping for leaks

Listed below are items that must be checked to ensure safe reliable operation. Verify proper operation after servicing.

⚠ WARNING Eliminate all system or appliance leaks. Continual fresh makeup water will reduce appliance life. Minerals can build up in sections, reducing heat transfer, overheating heat exchanger, and causing heat exchanger failure. Leaking water may also cause severe property damage.

1. Inspect all water and gas piping and verify to be leak free.
2. Look for signs of leaking lines and correct any problems found.
3. Check gas line using the procedure found in *Section 3 - Gas Connections*.

Flue vent system

1. Examine the venting system at least once a year. Check more often in the first year to determine inspection interval. Check all joints and pipe connections for tightness, corrosion or deterioration. Clean louvers and/or screens in the combustion air intake system as required. Have the entire system, including the venting system, periodically inspected by a qualified service agency.

Check water system

1. Verify all system components are correctly installed and operational.
2. Check the cold fill pressure for the system. Verify it is correct (must be a minimum of 12 PSI).
3. Watch the system pressure as the boiler heats up (during testing) to ensure pressure does not rise too high. Excessive pressure rise indicates expansion tank sizing or performance problem.
4. Inspect automatic air vents and air separators. Remove air vent caps and briefly press push valve to flush vent. Replace caps. Make sure vents do not leak. Replace any leaking vents.

8 Maintenance

Check Expansion Tank

1. Expansion tanks provide space for water to move in and out as the heating system water expands due to temperature increase or contracts as the water cools. Tanks may be open, closed, diaphragm or bladder type. See *Section 4 - Hydronic Piping* for suggested best location of expansion tanks and air eliminators.

Check Relief Valve

1. Inspect the relief valve and lift the lever to verify flow. Before operating any relief valve, ensure that it is piped with its discharge in a safe area to avoid severe scald potential. Read *Section 4 - Hydronic Piping* before proceeding further.

⚠ WARNING Safety relief valves should be re-inspected AT LEAST ONCE EVERY THREE YEARS, by a licensed plumbing contractor or authorized inspection agency, to ensure that the product has not been affected by corrosive water conditions and to ensure that the valve and discharge line have not been altered or tampered with illegally. Certain naturally occurring conditions may corrode the valve or its components over time, rendering the valve inoperative. Such conditions are not detectable unless the valve and its components are physically removed and inspected. This inspection must only be conducted by a plumbing contractor or authorized inspection agency – not by the owner. Failure to re-inspect the boiler relief valve as directed could result in unsafe pressure buildup, which can result in severe personal injury, death, or substantial property damage.

⚠ WARNING Following installation, the valve lever must be operated AT LEAST ONCE A YEAR to ensure that waterways are clear. Certain naturally occurring mineral deposits may adhere to the valve, rendering it inoperative. When manually operating the lever, water will discharge and precautions must be taken to avoid contact with hot water and to avoid water damage. Before operating lever, check to see that a discharge line is connected to this valve directing the flow of hot water from the valve to a proper place of disposal. Otherwise severe personal injury may result. If no water flows, valve is inoperative. Shut down the appliance until a new relief valve has been installed.

2. After following the above warning directions, if the relief valve weeps or will not seat properly, replace the relief valve. Ensure that the reason for relief valve weeping is the valve and not over-pressurization of the system due to expansion tank waterlogging or undersizing.

8 Maintenance *(continued)*

Check All Wiring

1. Inspect all wiring, making sure wires are in good condition and securely attached.

Check Control Settings

1. Adjust settings if necessary. See *Section 5 - Electrical Connections* for adjustment procedures.
2. Check settings of external limit controls (if any) and adjust if necessary.

Perform Start-up and Checks

1. Start appliance and perform checks and tests specified in *Section 6 - Start-up*.
2. Verify cold fill pressure is correct and that operating pressure does not go too high.

Check Burner Flame

Visually check main burner flames at each start-up after long shutdown periods or at least every six months. A burner viewport is located on the burner mounting flange.

⚠ WARNING The area around the burner and burner viewport is hot. Direct contact could result in burns.

Figure 8-1_Flame Pattern Illustration

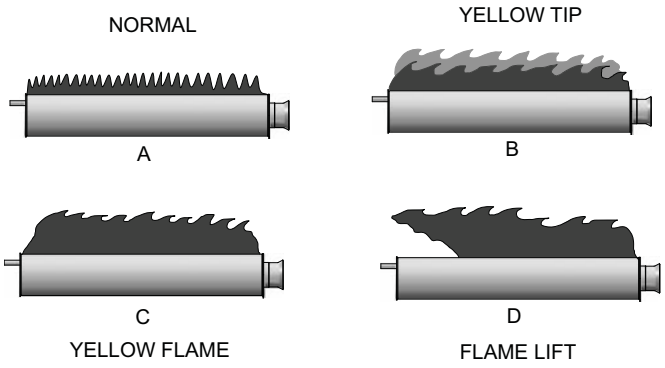

Normal Flame: A normal flame is blue, with slight yellow tips, with a well defined inner cone and no flame lifting.

Yellow Tip: Yellow tip can be caused by blockage or partial obstruction of air flow to the burner(s).

Yellow Flames: Yellow flames can be caused by blockage of primary air flow to the burner(s) or excessive gas input. This condition MUST be corrected immediately.

Lifting Flames: Lifting flames can be caused by over firing the burner(s) or excessive primary air.

If improper flame is observed, examine the venting system, ensure proper gas supply and adequate supply of combustion and ventilation air.

Combustion Air Adjustment

This appliance uses an atmospheric combustion process. Combustion air is provided to the burners by the gas injection pressure into the venturi of the burners. The burners do not have an adjustable air shutter. Adequate combustion air must be supplied to the room where the appliance is installed to ensure proper burner operation. Check frequently to be sure the flow of combustion and ventilation air to the unit is not obstructed. When the main burners light, observe the burner flame. Flames should be light blue in color with slight yellow tips; flames should be settled on burner head with no lifting when supplied with correct volume of combustion air.

Check Flue Gas Passageways

Any sign of soot around the outer jacket, at the burners or in the areas between the fins on the copper heat exchanger indicates a need for cleaning. The following cleaning procedure must only be performed by a qualified serviceman or installer. Proper service is required to maintain safe operation. Properly installed and adjusted appliances seldom need flue cleaning.

NOTICE All gaskets on disassembled components must be replaced with new gaskets on reassembly. Gasket kits are available from your distributor.

8 Maintenance

Inspect and Clean Burner

⚠ WARNING The combustion chamber insulation in this appliance contains ceramic fiber material. The International Agency for Research on Cancer (IARC) has concluded, "Crystalline Silica in the form of quartz or cristobalite from occupational sources is carcinogenic to humans (Group 1)." Normal operating temperatures in this appliance are below the level to convert ceramic fibers to cristobalite. Abnormal operating conditions would have to be created to convert the ceramic fibers in this appliance to cristobalite.

The ceramic fiber material used in this appliance is an irritant; when handling or replacing the ceramic materials it is advisable that the installer follow these safety guidelines:

- ❑ Avoid breathing dust and contact with skin and eyes.
  - Use NIOSH certified dust respirator (N95). This type of respirator is based on the OSHA requirements for cristobalite at the time this document was written. Other types of respirators may be needed depending on the jobsite conditions. Current NIOSH recommendations can be found on the NIOSH website at (http://www.cdc.gov/niosh/homepage.html). NIOSH approved respirators, manufacturers and phone numbers are also listed on this website.
  - Wear long-sleeved, loose fitting clothing, gloves, and eye protection.
- ❑ Apply enough water to the combustion chamber lining to prevent airborne dust.
- ❑ Remove combustion chamber lining from the appliance and place it in a plastic bag for disposal.
- ❑ Wash potentially contaminated clothes separately from other clothing. Rinse clothes thoroughly.
- ❑ NIOSH stated First Aid:
  Eye: Irrigate immediately.
  Breathing: Fresh air.

Heat Exchanger / Burner Access

a. Turn "OFF" main power to the appliance.

b. Turn "OFF" external manual gas shutoff valve to appliance.

c. Remove the control panel door.

d. Remove the outer air deflector (FIG. 8-2).

e. Disconnect gas valve wiring and remove gas manifold assembly.

f. Remove ignition wire leading to the pilot assembly from the ignition module.

g. Disconnect the wiring from the flame rollout/interlock switch, see FIG. 8-2, page 59.

h. Remove the lower front jacket panel.

i. Remove the control panel mounting screws. When removing the control panel, lay the control panel to the side with the wiring intact, being careful not to damage any of the wiring.

j. Remove the combustion chamber door. Use caution to prevent damage to burners, refractory, pilot or wiring.

Inspection and Cleaning Procedure

⚠ DANGER When cleaning burner, DO NOT use a steel wire brush as it may spark and create a hazardous situation causing property damage, serious injury, or death. Use a soft bristle brush when cleaning burner.

k. Check the heat exchanger surface for sooting. The external surfaces of the copper tubes should be free of any soot deposits. (A slight black smudge is normal with some types of gases.) If abnormal soot deposits are present, the heat exchanger must be cleaned and the cause of the soot problem corrected. Proceed as follows:

l. Remove soot from burners and bottom of the finned tubes with a stiff bristle brush. Dirt may also be removed from burner ports by rinsing the burner thoroughly with water. Drain and dry burners before re-installing. Damaged burners must be replaced.

An appliance installed in a dust or dirt contaminated atmosphere will require cleaning of the burners on a 3 to 6 month schedule or more often, based on severity of contamination. Contaminants can be drawn in with the combustion air. Non-combustible particulate matter such as dust, dirt, concrete dust or dry wall dust can block burner ports and cause non-warrantable failure. Use extreme care when operating an appliance for temporary heat during new construction. The burners will probably require a thorough cleaning before the appliance is placed in service.

m. Remove gas manifold as described in steps a. through e. in "*Heat Exchanger/Burner Access.*"

n. Loosen mounting screws and remove front control panel.

o. Loosen screws on the upper front jacket panel and remove toward front of the appliance. Use caution to prevent damage to refractory on the doors inner surface.

8 Maintenance *(continued)*

p. Check "V" baffles on top of the heat exchanger. Remove and clean if necessary.

q. Remove soot from the heat exchanger with a stiff bristle brush. Soot may also be removed from the heat exchanger by washing thoroughly with detergent and water. Remove the heat exchanger before using water for cleaning. Rinse thoroughly and dry before re-installing. Use a vacuum to remove loose soot from surfaces and inner chamber.

r. Remove the heat exchanger (HEX) filler bracket (FIG. 8-2).

s. The heat exchanger can be removed by sliding towards the front of the appliance. Once the heat exchanger is removed from the appliance, a garden hose can be used to wash the tubes to ensure that all soot is removed from the heat exchanger surfaces.

t. Ensure that all burner ports are cleaned to remove any soot. See *Inspection and Cleaning Procedure*, page 58.

u. Carefully re-install the heat exchanger, "V" baffles, jacket panels, and wires.

v. Reassemble all gas and water piping. Test for gas leaks.

w. Cycle the appliance and check for proper operation.

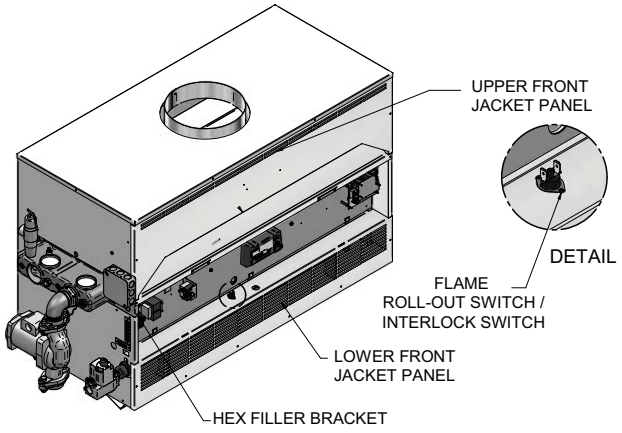

***Figure 8-2**_Outer Air Deflector and HEX Filler Bracket*

Water Circulating Pump

Inspect pump every 6 months and oil if required. Use SAE 30 non-detergent oil or lubricant specified by pump manufacturer.

Clear Area

1. Keep appliance area clear and free from combustible materials, gasoline and other flammable vapors and liquids.

2. Check frequently to be sure the flow of combustion and ventilation air to the boiler is not obstructed.

Inspection of Heat Exchanger Waterways

Appliances operated in hard water areas should have periodic inspections of the tubes to be sure that no sediment or scale accumulates on the heat transfer surfaces. Inspection plugs are located at both ends of the heat exchanger. Inspection plugs should be removed and tubes inspected at the end of the first 45 days of operation and again at the end of 90 days of operation. If no scale accumulation is observed, inspections can be made at the end of each six months of operation.

Pilot Flame Adjustment Procedure

The pilot flame should envelop 3/8" to 1/2" (10 to 13mm) of the tip of the thermocouple (see FIG. 8-3).

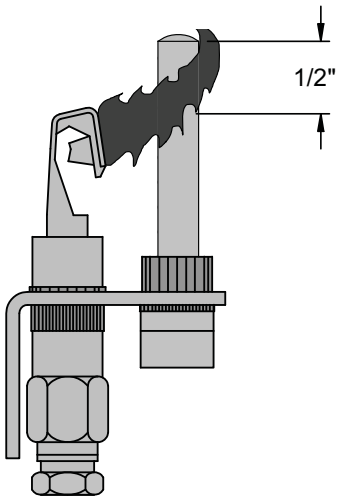

***Figure 8-3**_Pilot Flame on Thermocouple*

a. Remove pilot adjustment cover screw on the gas valve. See the Gas Valve illustrations in the *Lighting Instructions* section (page 41) for the location of the cover screw.

b. Turn the inner adjustment screw clockwise to decrease or counterclockwise to increase pilot flame.

c. Replace the pilot adjustment cover screw on the valve. Tighten firmly after adjustment to prevent gas leakage.

8 Maintenance

IMPORTANT

Upon completion of any testing on the gas system, leak test all gas connections with a soap solution while main burners are operating. Immediately repair any leak found in the gas train or related components. **Do Not** operate an appliance with a leak in the gas train, valves or related piping.

Gas Train and Controls

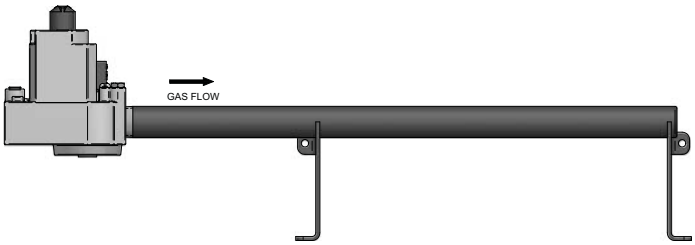

***Figure 8-4**_Gas Train 90,000 - 399,999 Btu/hr Models*

***Figure 8-5**_Gas Train 500,000 Btu/hr Model*

Review with owner

1. Review the User's Information Manual with the owner.
2. Emphasize the need to perform the maintenance schedule specified in the User's Information Manual (and in this manual as well).
3. Remind the owner of the need to call a licensed contractor should the appliance or system exhibit any unusual behavior.
4. Remind the owner to follow the proper shutdown procedure and to schedule an annual start-up at the beginning of the next heating season.

9 Troubleshooting

Troubleshooting Guide: 315,000 - 500,000 Btu/hr Models - Boilers 90,000 - 500,000 Btu/hr Water Heaters F9/M9

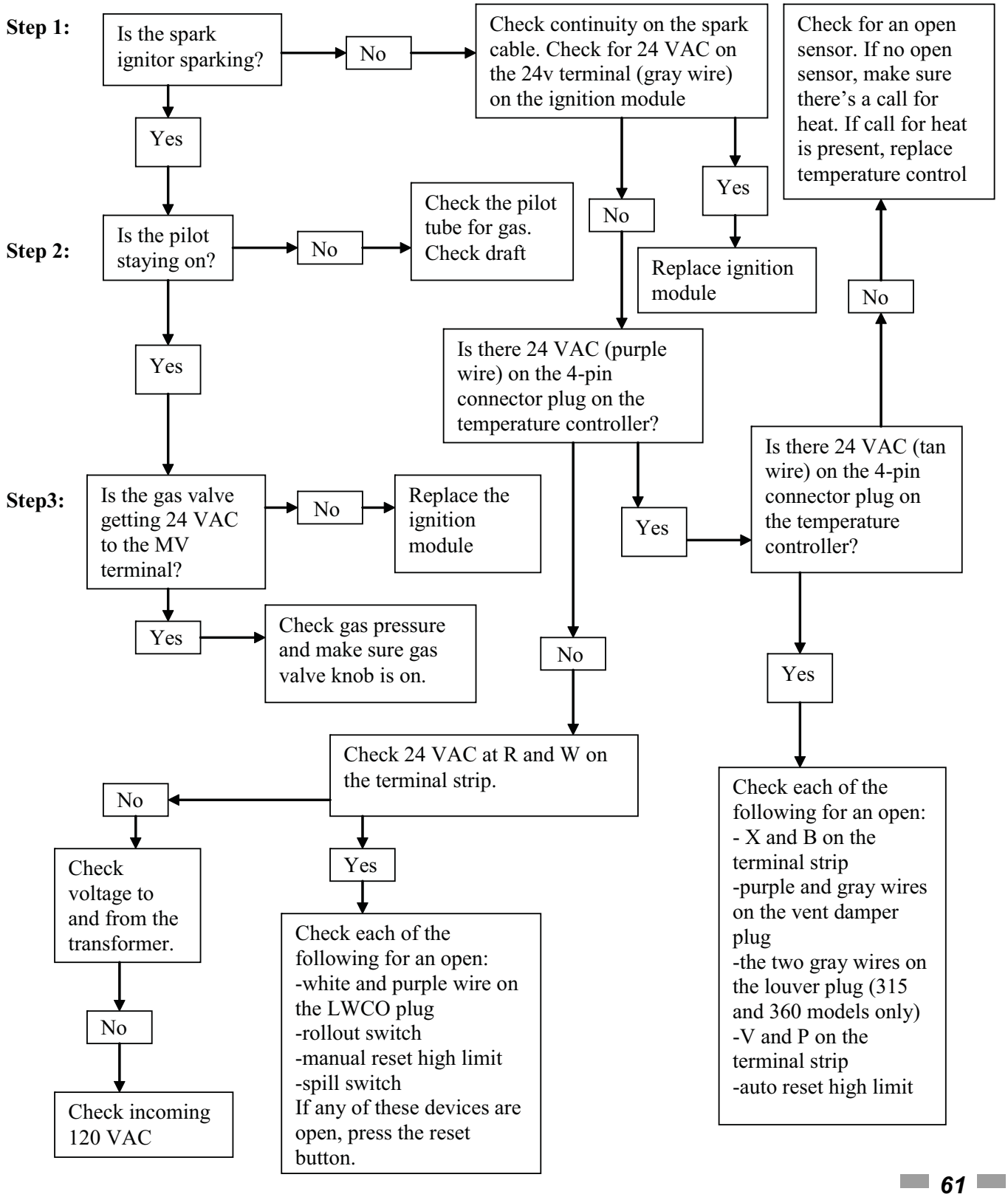

9 Troubleshooting

Troubleshooting Guide:
90,000 - 270,000 Btu/hr Models - Water Heaters F1

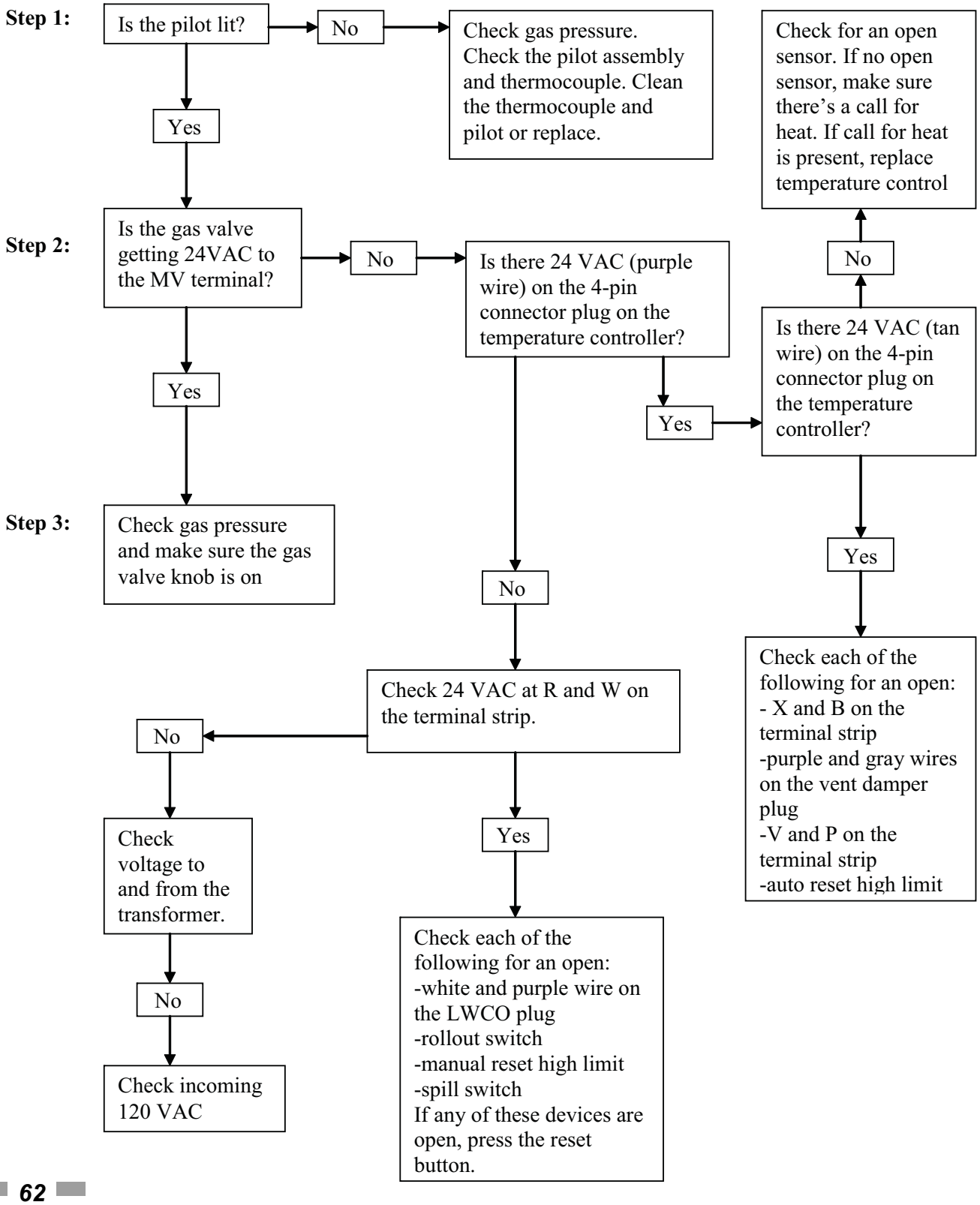

10 Diagrams

Schematic Diagram - F1 Unit 90,000 - 270,000 Btu/hr Models

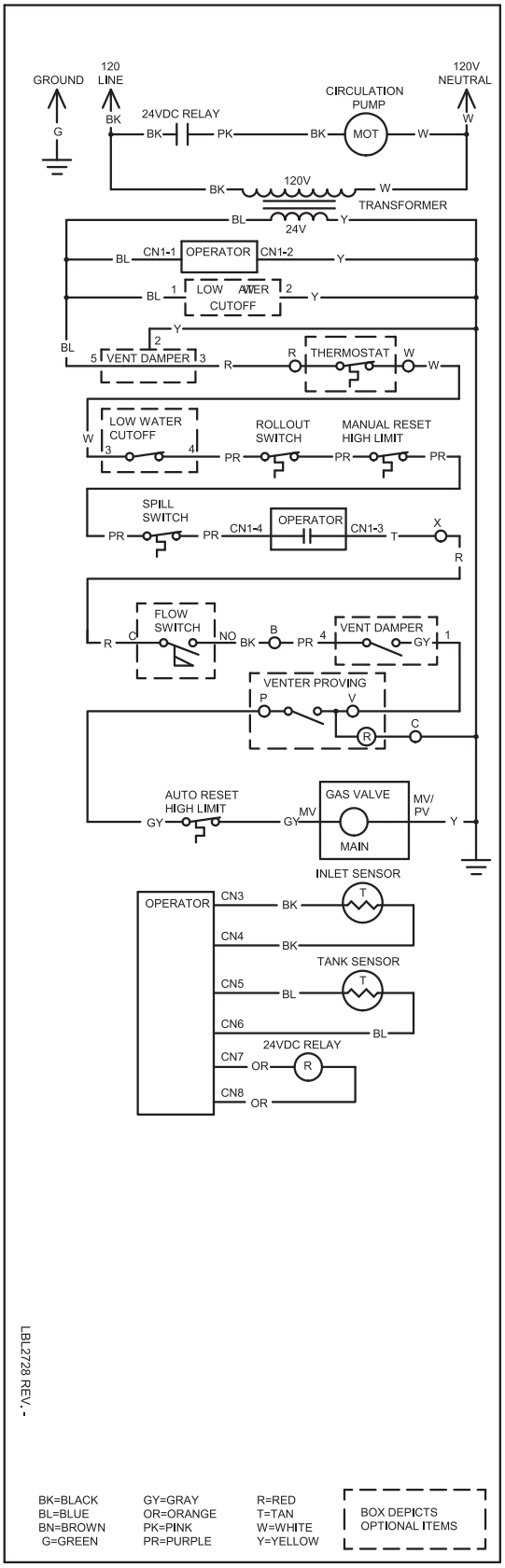

Wiring Diagram - F1 Unit 90,000 - 270,000 Btu/hr Models

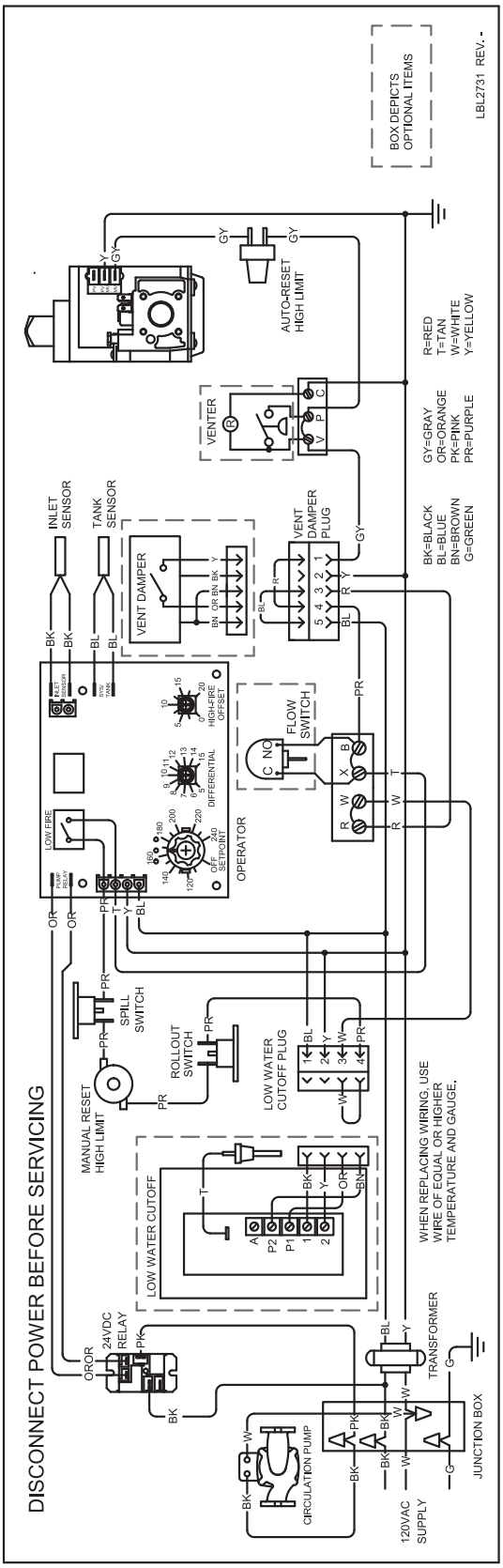

10 Diagrams

Schematic Diagram - F9 Unit 315,000 - 399,999 Btu/hr Models

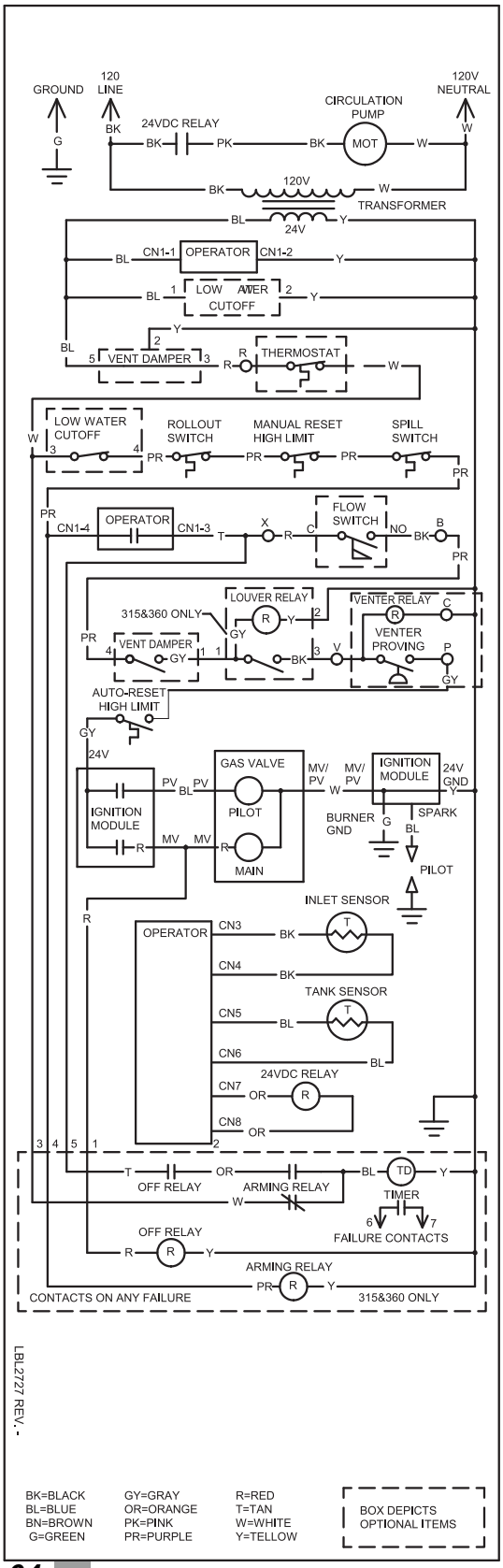

Wiring Diagram - F9 Unit 315,000 - 399,999 Btu/hr Models

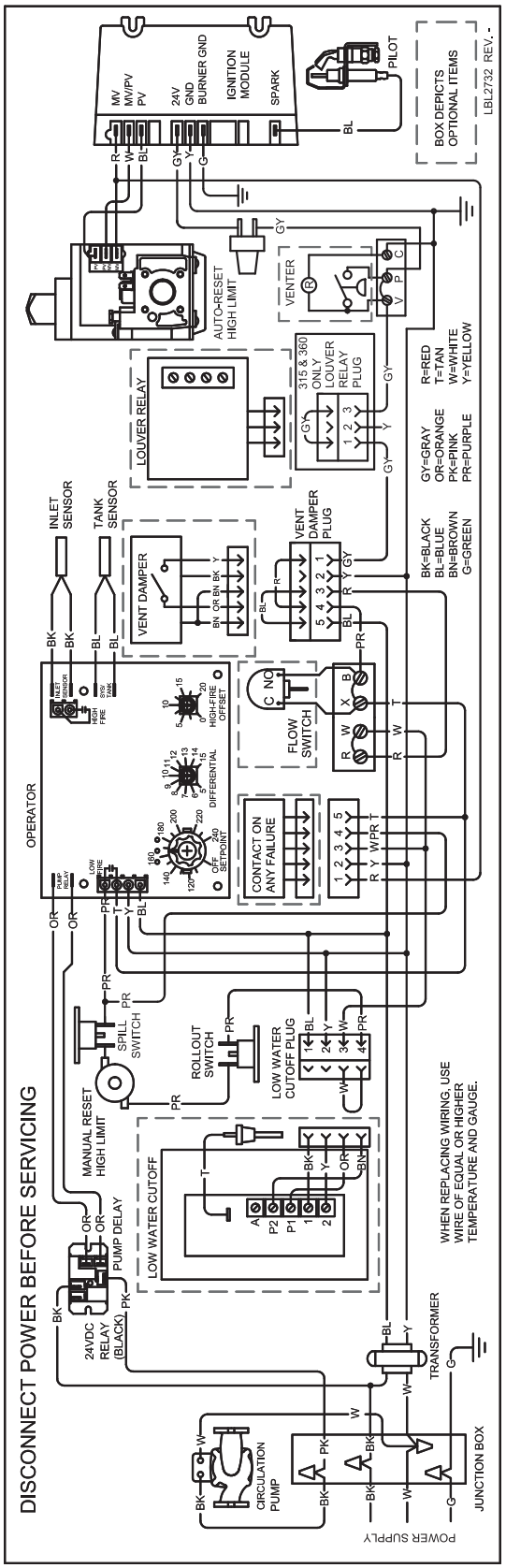

10 Diagrams *(continued)*

Schematic Diagram - M9 Unit 315,000 - 399,999 Btu/hr Models

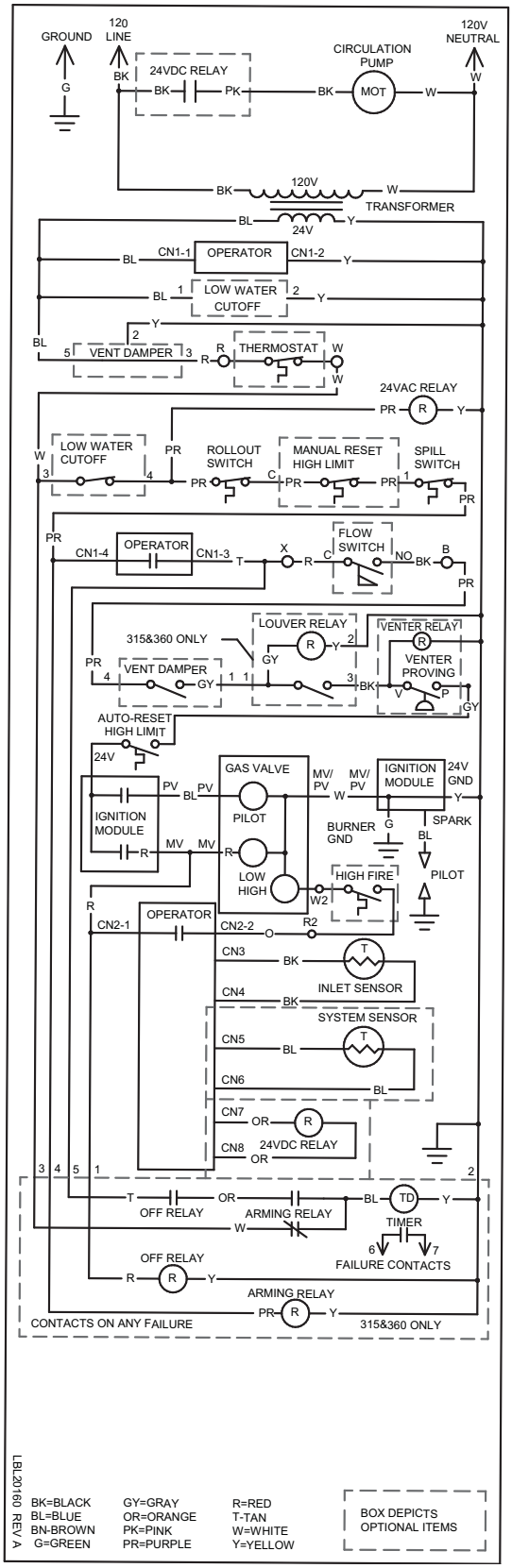

Wiring Diagram - M9 Unit 315,000 - 399,999 Btu/hr Models

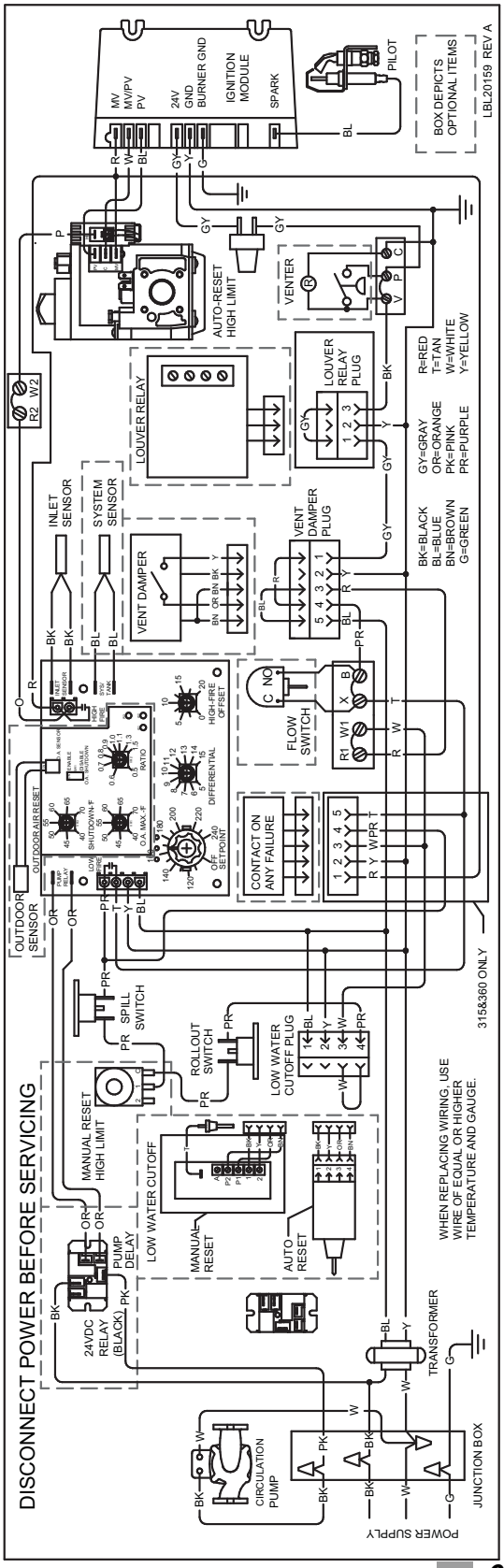

10 Diagrams

Schematic Diagram - F9/M9 Unit 500,000 Btu/hr Models

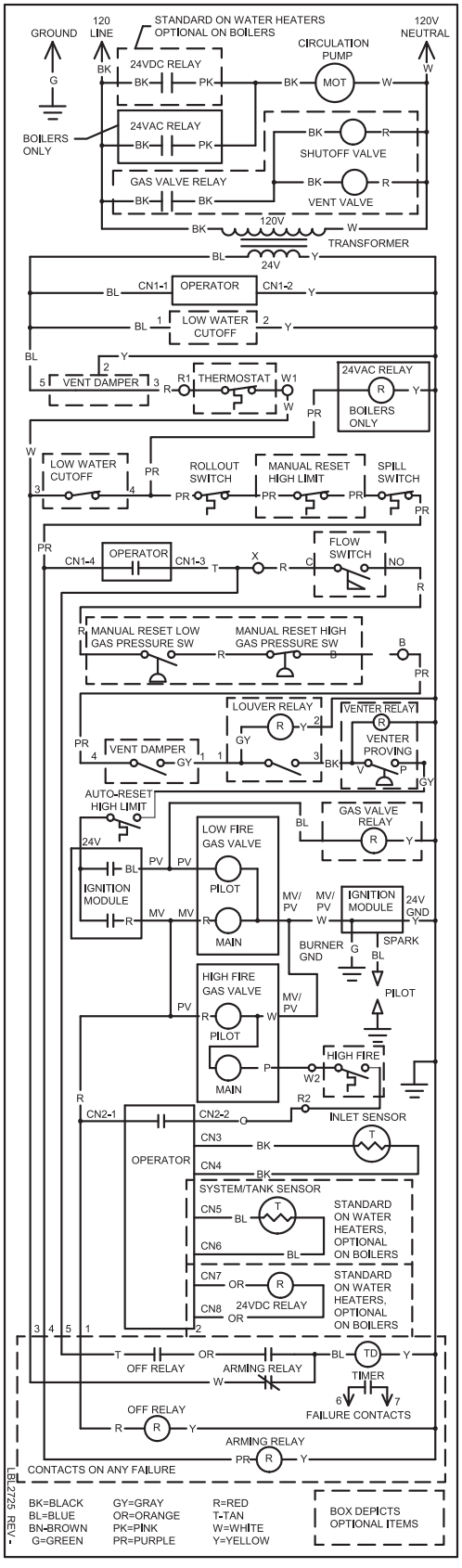

Wiring Diagram - F9/M9 Unit 500,000 Btu/hr Models

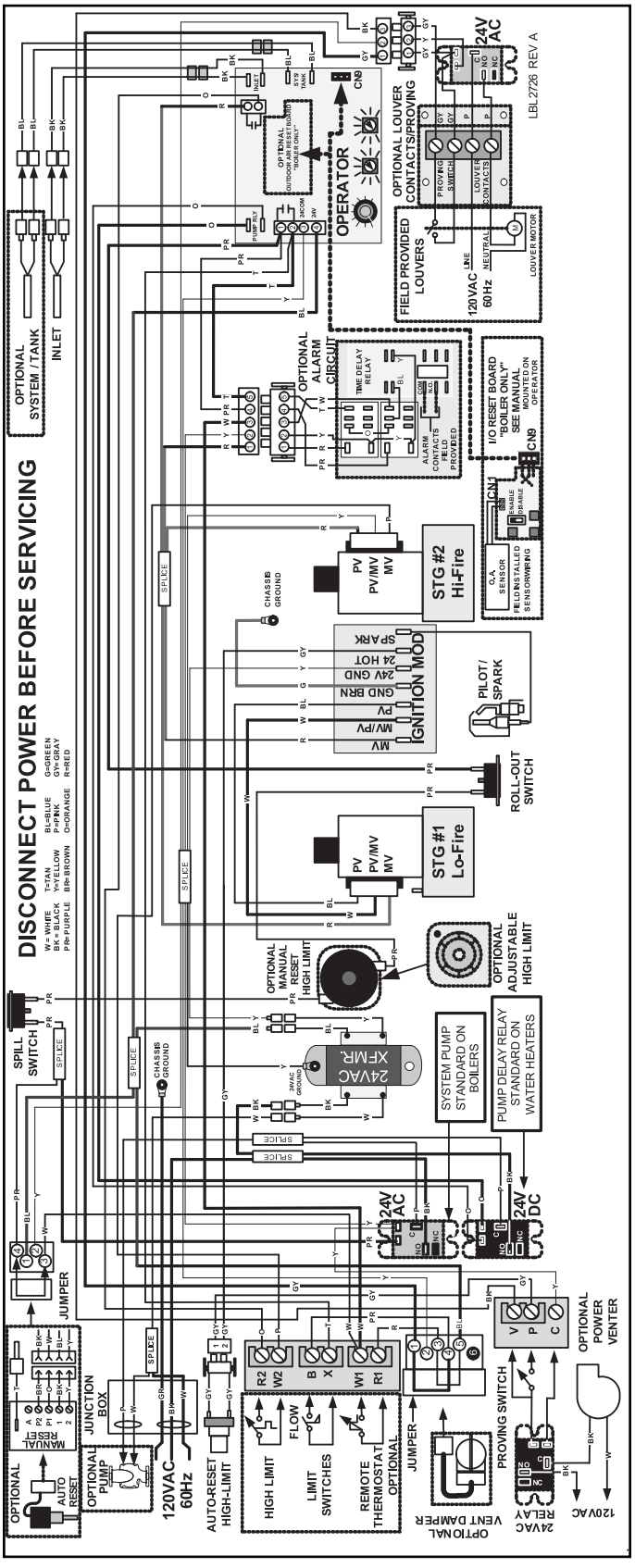

Notes

parts4heating
800-536-1582 Fax: 866-448-9304
info@parts4heating.com

Lochinvar®
High Efficiency Water Heaters, Boilers and Pool Heaters
300 Maddox Simpson Parkway
Lebanon, TN 37090

Revision A (ECO #C06290) initial release.