FOR YOUR SAFETY - This product must be installed and serviced by a professional service technician, qualified in pool heater installation. Improper installation and/or operation could create carbon monoxide gas and flue gases which could cause serious injury or death. Improper installation and/or operation will void the warranty.

Installation, Operation and Service Manual

Series 2
Model ESG
Pool and Spa Heater

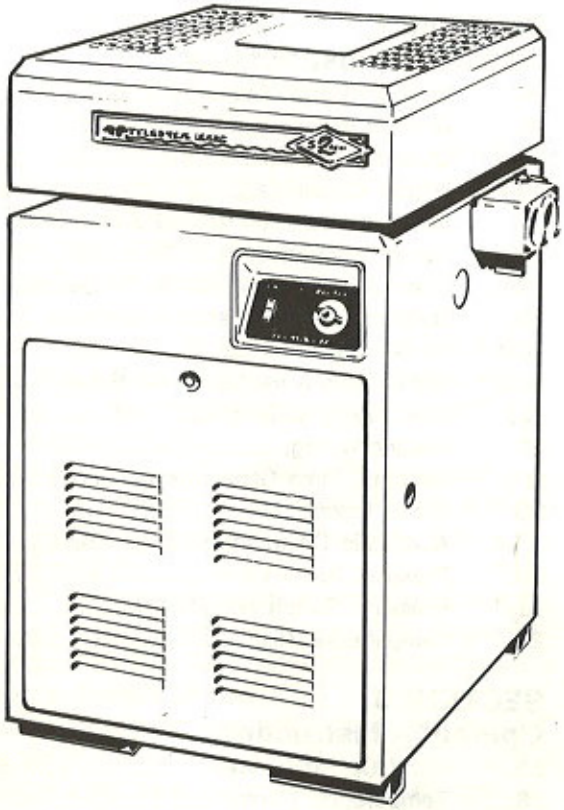

WARNING: If these instructions are not followed exactly, a fire or explosion may result, causing property damage, personal injury or death.

Do not store or use gasoline or other flammable vapors and liquids in the vicinity of this or any other appliance

WHAT TO DO IF YOU SMELL GAS

- **Do not try to light any appliance.**
- **Do not touch any electrical switch; do not use any phone in your building.**
- **Immediately call your gas supplier from a neighbor's phone. Follow the gas supplier's instructions.**
- **If you cannot reach your gas supplier, call the fire department.**

Installation and service must be performed by a qualified installer, service agency or the gas supplier

H0166200C

TELEDYNE LAARS

TABLE OF CONTENTS

DESIGN AMERICAN GAS ASSOCIATION CERTIFIED

APPROVED

SECTION 1. General Information

1A. Introduction

This manual provides information for the proper installation, operation and maintenance of the Series 2 Model ESG millivolt pool heater. The American Gas Association design-certifies the Series 2 heaters as complying with the latest edition of the Standard for Gas-Fired Pool Heaters, ANSI Z21.56. In Canada, CGA certifies that the heaters comply with standard CAN1-4.7-M85. Check local and state codes before beginning the installation.

Certain Sections of this manual are specific to either United States or Canadian installations, and are labeled as such.

The Installation, Operation and Maintenance manual must be followed exactly. Copies of this manual are available from the factory: 6000 Condor Drive, Moorpark, CA 93021, attn: Literature Dept.

1B. Description

The Model ESG is a compact, high performance pool/spa heater. It does not require connection to an external electrical source. The heater converts heat from the pilot into electricity which operates the controls.

Teledyne Laars specifically designs this appliance to heat fresh water swimming pools and spas. Do not use it as a heating boiler or general service water heater. For special applications, including salt water installations, consult your Teledyne Laars dealer.

Teledyne Laars ships the heater with the water connections on the right side. It could be necessary, or helpful, to move the connections to the left side for improved service access. Instructions for making this change are in Section 5. The procedure should only be done by a professional service technician, qualified in pool heater installation and maintenance.

1C. Warranty

Teledyne Laars sells the Series 2 heater with a limited factory warranty. A copy of the warranty is on the back cover of this manual.

The home owner should fill out the warranty registration card included in the plastic bag and return it to Teledyne Laars.

The warranty does not cover damage caused by improper installation or field modification, or to the heat exchanger by corrosive water. Section 3G explains proper pool water chemistry.

SECTION 2. Installation Instructions

2A. General (United States) (See page 2 for Canada)

All gas-fired products require correct installation to assure safe operation. The requirements for pool heaters include the following:

1. Appropriate site location (clearances).
2. Non-Combustible surface.
3. Sufficient combustion air and ventilation air.
4. Adequate venting (products of combustion).
5. Properly sized gas pipe.
6. Adequate water flow.
7. Regular maintenance.

The heater must be installed at least five feet from the inside wall of the pool or spa unless separated from the pool or spa by a solid fence, wall or other permanent barrier.

The National Fuel Gas Code offers general guidelines for combustion air, ventilation air, and venting. Follow these criteria to insure a safe, efficient installation.

Select the heater location to permit satisfactory air supply for proper venting, and to allow space for maintenance access. Recommended clearances are specified in Section 2B and 2C.

Locate the heater in an area where leakage of the heater or connections will not result in damage to the area around the appliance or to the structure. Where such locations cannot be avoided, install a suitable drain pan, adequately drained, under the heater. This pan must not restrict air flow.

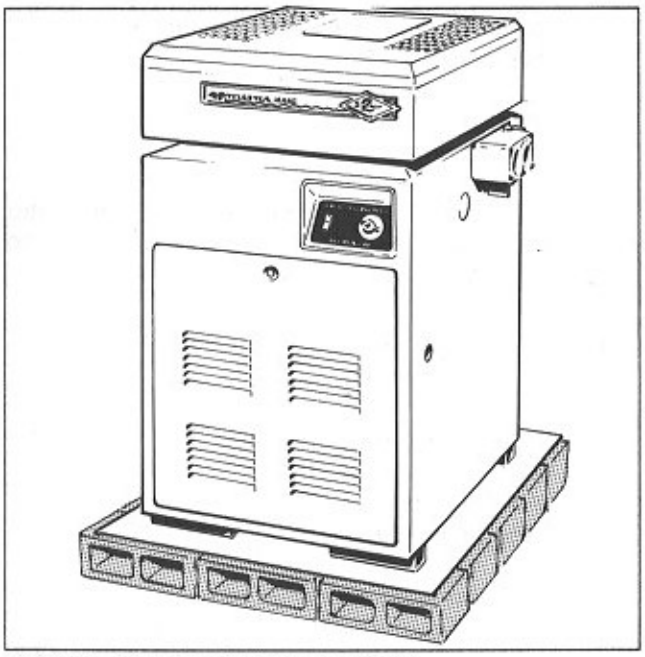

Figure 1. Non-Combustible Platform

Except as noted below, install all heaters on a non-combustible surface. A surface consisting entirely or a combination of steel, iron, brick, tile, concrete, slate, glass or plaster would be non-combustible.

You can install the heater on a combustible floor by placing a non-combustible base under the heater, available from Teledyne Laars. See the rating plate for the base part number. Do not install heaters on carpeting.

The Fuel Gas Code permits a heater to be placed on a combustible surface when the installation complies with the American Insurance Code. This code specifies that there is a platform under the heater constructed of hollow masonry no less than 4" thick, covered with sheet metal at least 24 ga. thick. The masonry must be laid with ends unsealed, and joints matched to provide a free circulation of air from side to side through the masonry (see Figure 1).

Safe operation at the proper manifold pressure requires correct sizing of supply gas pipe. The National Fuel Gas Code also offers general criteria for gas piping (see Section 2E).

If the above installation requirements are not followed, the fuel used in these appliances could produce and expose you to substances that are known to cause cancer or reproductive harm.

Install the heater in accordance with all local codes and ordinances and the most recent edition of the National Fuel Gas Code, ANSI Z223.1.

The National Fuel Gas Code is available from:

American Gas Association
(Administrative)
1515 Wilson Blvd.
Arlington, VA 22209

National Fire Protection Association
Batterymarch Park
Quincy, MA 02269

2A. General (Canada)

All gas-fired products require correct installation to assure safe operation. The requirements for pool heaters include the following:

1. Appropriate site location (clearances).
2. Non-Combustible surface.
3. Sufficient combustion air and ventilation air.
4. Adequate venting (products of combustion).
5. Properly sized gas pipe.
6. Adequate water flow.
7. Regular maintenance.

Select the heater location to permit satisfactory air supply for proper venting, and to allow space for maintenance access. Recommended clearances are specified in Section 2B and 2C.

Locate the heater in an area where leakage of the heater or connections will not result in damage to the area around the appliance or to the structure. Where such locations cannot be avoided, install a suitable drain pan, adequately drained, under the heater. This pan must not restrict air flow.

Except as noted below, install all heaters on a non-combustible surface. A surface consisting entirely or a combination of steel, iron, brick, tile, concrete, slate, glass or plaster would be non-combustible.

You can install the heater on a combustible floor by placing a non-combustible base under the heater, available from Teledyne Laars. See the rating plate for the base part number. Do not install heaters on carpeting.

This heater shall not be operated outdoors at temperatures below -7°C (20°F).

Safe operation at the proper manifold pressure requires correct sizing of gas supply pipe. The gas installation code offers general criteria for gas piping.

If the above installation requirements are not followed, the fuel used in these appliances could produce and expose you to substances that are known to cause cancer or reproductive harm.

Install the heater in accordance with all local codes and ordinances and the most recent edition of the CGA standards, CAN/CGA-B149.1 or .2 installation codes for Gas Burning Appliances.

The Canadian Gas Installation Codes are available from:

Canadian Gas Association
55 Scarsdale Road
Don Mills, Ontario
M3B 2R3

Special Precautions for LP Gas Heaters

LP gas is heavier than air. Therefore, do not install pool heaters using LP gas in pits or other locations where gas might collect. Locate the heaters a safe distance from LP gas storage and filling equipment. Consult local codes and fire protection authorities about specific installation restrictions.

2B. Outdoor Installation

2B-1 Heater Clearance

Locate the heater in an open, unroofed area, and maintain the following clearances:

Blank Side and rear of heater	6" Minimum
Piping side	12" Minimum
Front of heater	18" Minimum. In Canada, there must be 36" clearance.
Floor	Non-combustible*

*If you are installing the heater on a combustible surface, order a special base from Teledyne Laars.

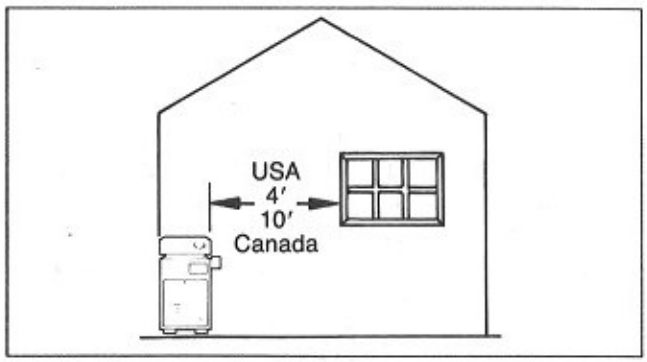

Figure 2. Outdoor Heater Location

Do not install the heater in a location where leaves or other combustible materials can accumulate around the base or on the top.

Do not locate the heater close to sprinklers; the water could damage the controls and the electronics.

If you are installing the heater under an overhang, there must be a minimum clearance of 3 feet above the top of the heater. The area under the overhang must be open on three sides. This prevents combustion gases from being diverted into living areas through doors, windows or gravity inlets. Protect the heater from direct water drainage.

⚠WARNING

In United States

Do not install the heater with the top of the vent assembly within 4 feet of any opening into a building (see Fig. 2).

In Canada

Do not install the heater with the top of the vent assembly within 10 feet of any opening into a building (see Fig. 2).

IMPORTANT: Due to the possibility of downdrafts caused by high wind conditions, locate the heater at

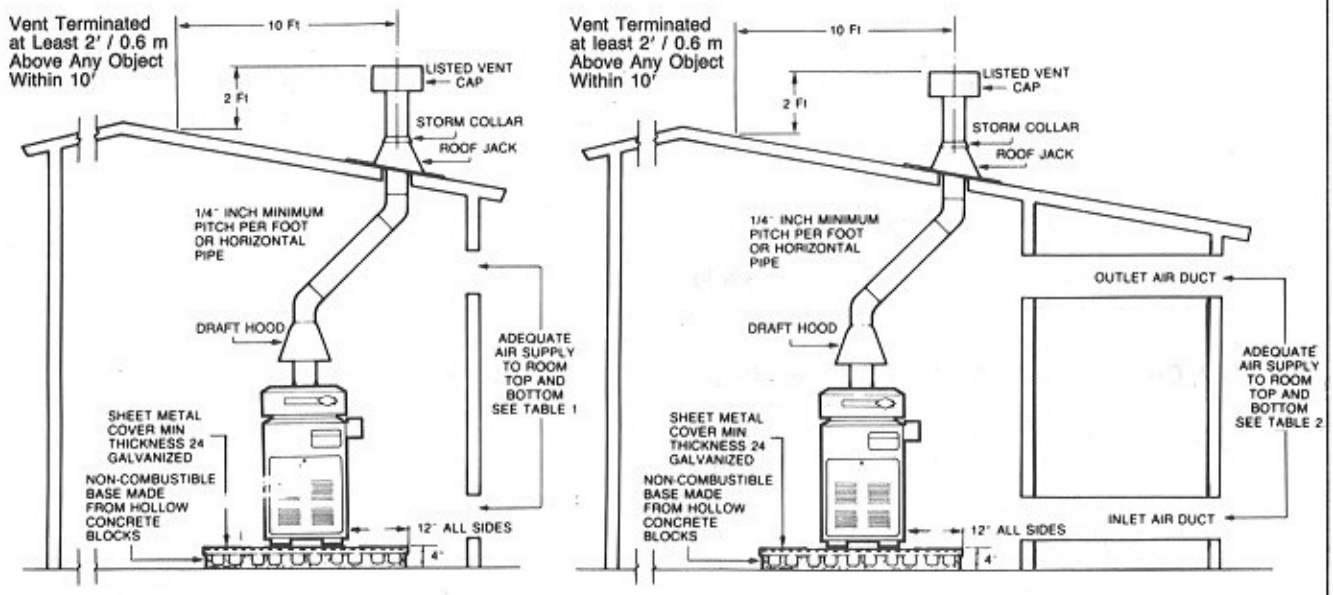

Required Net Free Opening Area
(Square Inches)
Directly from Outside

Model	At Top	At Bottom
125	32	32
175	44	44
250	63	63
325	82	82
400	100	100

Table 1. Direct Air Openings

Required Net Free Opening Area
(Square Inches)
Ducted from Outside

Model	At Top	At Bottom
125	63	63
175	88	88
250	125	125
325	163	163
400	200	200

Table 2. Ducted Air Openings

NOTE:

1. The draft hood must sit directly on top of the heater as shown and must not be altered in any manner.
2. An Underwriters Laboratories listed vent cap is required to eliminate down draft and allow the heater to function properly.
3. Use approved roof jack.

Figure 3. Indoor Installation Venting (United States Only)

least 3 feet from vertical surfaces, such as nearby buildings and walls. The addition of a vent cap may be necessary.

2C. Indoor Installation (United States Only)

The Series 2 heater is design-certified for indoor installation only when equipped with a draft hood. Check the rating plate for the correct Teledyne Laars draft hood part numbers. Install the draft hood without modification.

Connect the draft hood to a vent pipe which stops at least two feet above the highest point of the roof or other object that is within ten feet of the vent. Install a listed cap which allows a full equivalent opening for flue products (see Fig. 3).

2C-1. Heater Clearance

Top of Heater	44" minimum clearance
Blank side and rear of heater	6" minimum clearance
Piping side	12" minimum clearance
Front of heater	18" minimum clearance
Floor	Non-combustible*

* If you are installing the heater on a combustible surface, order a special base from Teledyne Laars.

2C-2. Combustion and Ventilation Air Supply

All indoor installations must have uninterrupted openings to outside air for combustion and ventilation. Tables 1 and 2 (see Fig. 3) show the net free opening areas required at both ceiling and floor for the different heater sizes. Teledyne Laars does not recommend indoor installations that depend on infiltration air for combustion.

NOTE: Check with louver manufacturers for Net Free Area of louvers. Correct for screen resistance to the Net Free Area if a screen is installed. Check all local codes applicable to combustion air.

⚠WARNING

Improper installation or maintenance can cause nausea or asphyxiation from carbon monoxide and flue gases which could result in severe injury or death.

If the heater is installed in a residential garage, the burners must be 18" above the garage floor. See the National Fuel Gas Code for more information .

⚠WARNING

The conversion of this appliance from natural gas to propane gas, or propane to natural, must be done by a qualified technician. The change is made by replacing the existing burner tray assembly with a new burner tray ordered and supplied by Teledyne Laars. Changing burner and pilot orifices is prohibited. The qualified technician must add and sign a gas conversion tag when the conversion is made.

2D. Outdoor Shelter Installation (Canada Only)

The Series 2 heater is certified for installation in an outdoor shelter only when equipped with a draft hood (An outdoor shelter is an enclosure not normally occupied which does not communicate directly with occupied areas). Check the rating plate for the correct Teledyne Laars draft hood part number. See instructions supplied with the draft hood for installation and attachment. When the draft hood is used, locate the heater so as to be in the same atmospheric pressure zone as the combustion air inlet to the heater.

Connect the draft hood to a vent pipe which stops at least two feet above the highest point of the roof or other object that is within ten feet of the vent. Install a listed cap which allows a full equivalent opening for flue products.

2D-1. Heater Clearance

Top of Heater	44" minimum clearance
Blank side and rear of heater	6" minimum clearance
Piping side	12" minimum clearance
Front of heater	36" minimum clearance (Closet installation not permissible)
Floor	Non-combustible*

* If you are installing the heater on a combustible surface, order a special base from Teledyne Laars.

2D-2. Combustion and Ventilation Air Supply

All outdoor shelter installations must have uninterrupted openings to outside air for combustion and ventilation. See gas installation code CAN/CGA B149, latest edition, for the net free opening areas required at both ceiling and floor for the different heater sizes. Teledyne Laars does not recommend outdoor shelter installations that depend on infiltration air for combustion.

If the heater is installed in a residential garage, or where flammable vapors will be present, the burners must be 18" above the garage floor. See Gas Installation Code CAN/CGA B149, latest edition.

2E. Gas Supply and Piping

Heaters shipped from the factory are certified to operate at an altitude of 0 to 2000 feet or, if so ordered, at higher altitudes.

In United States:

The heater manifold is marked with a tag or sticker for appropriate high altitude operation.

High altitude **(H)** is 2,000 to 6,000 feet and
High altitude **(J)** is 6,000 to 10,000 feet above sea level.

In Canada:

High altitude **(H)** is 2,000 to 4,500 feet above sea level.

The heater rating plate is marked for specific altitude requirements.

Teledyne Laars recommends the gas inlet pipe sizes in Table 3. Check local codes for compliance before installing the heater.

HEATER SIZE	DISTANCE FROM METER 0-50'	51-100'	101-200'
125	3/4"	1"	1"
175	1"	1"	1-1/4"
250	1"	1-1/4"	1-1/4"
325	1-1/4"	1-1/4"	1-1/2"
400	1-1/4"	1-1/2"	1-1/2"

NOTE: For LP gas, use one size smaller pipe except on the Model 125 which requires 3/4" from 0-50'.

Table 3. Recommended Gas Inlet Pipe Sizes

Provide a union on the gas supply line outside the heater jacket, including a drip leg and a manual shutoff valve (see Fig. 4). Do not use a restrictive gas cock.

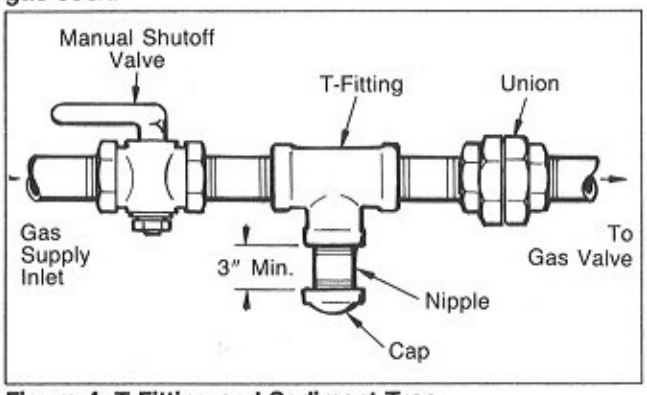

Figure 4. T-Fitting and Sediment Trap

Disconnect the heater and its individual shutoff valve from the gas piping during supply pressure testing if the test pressure is higher than 1/2 psig (3.7 kPa). If the test pressure is equal to or less than 1/2 psig (3.7 kPa), close the manual shutoff valve on the heater during the piping pressure test.

If the supply gas pressure is less than required, check for under-sized pipe between the meter and the heater, a restrictive fitting, or an under-sized gas meter.

Before operating the heater, test all gas connections for leaks with a soap solution. Do not use an open flame.

Gas		
Natural	Max. 10" W.C.	Min. 5.0" W.C. 6.0" (Sizes 325-400)
LP	Max. 14"	Min. 10.0"

Table 4. Inlet Gas Pressure

The maximum inlet gas pressure must not exceed the specified value. The minimum value listed is for the purpose of input adjustment.

2F. Electric Wiring

⚠WARNING

Do not connect the heater to any external source of electricity. The Teledyne Laars Series 2 ESG heater has a built-in thermoelectric generator. It provides a completely self-contained electrical system. Any attempt to make electrical connections to an external source will damage the heater, and could be hazardous. See Figure 5 for typical wiring diagram.

2F-1. Auxiliary Time Clock Wiring

If you install a time clock to control the filter pump operation, the clock must have its own low voltage (Fireman's) switch to turn off the heater before turning off the pump. The switch should shut off the heater about 15 minutes before the filter pump shuts off.

To install a time clock auxiliary switch into the heater wires, follow these steps (see Fig. 6):

1. Remove the service door.

2. Remove the factory installed wire between terminals 1 and 2 on the terminal strip (see Fig. 7).

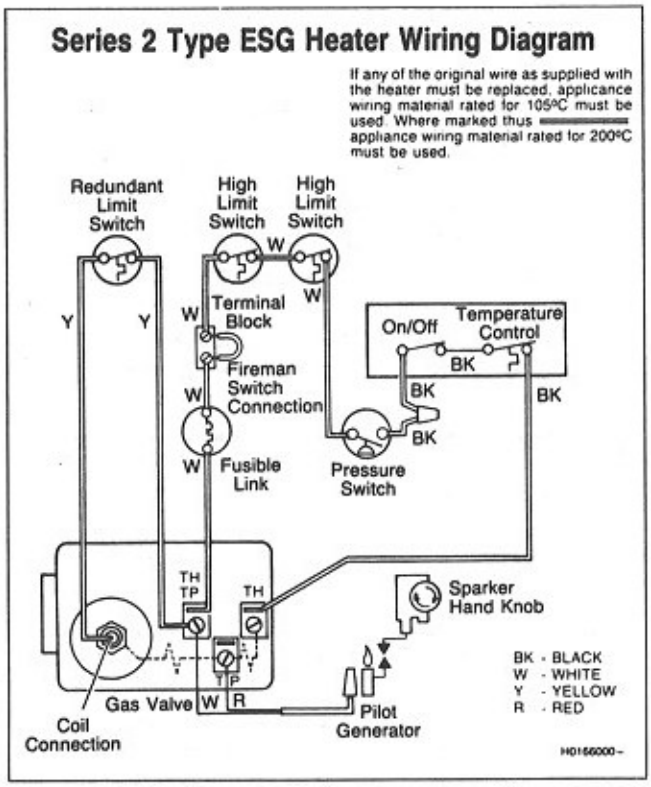

Figure 5. ESG Wiring Diagram

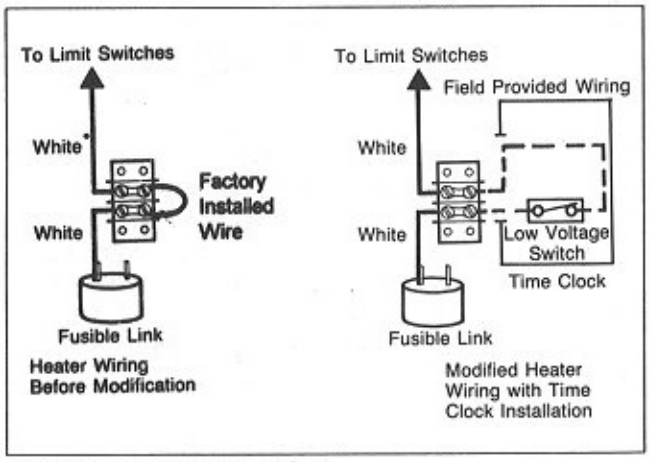

Figure 6. Time Clock Wiring

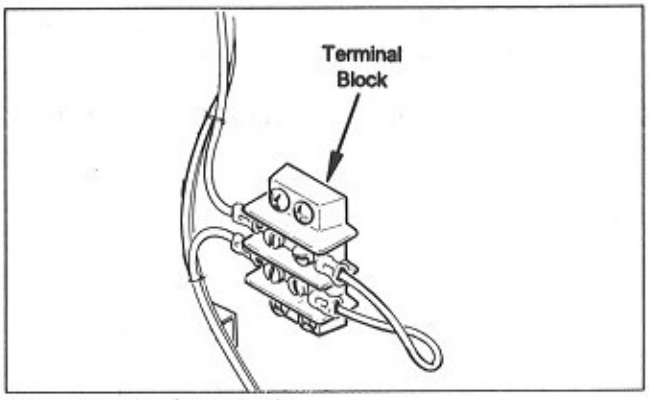

Figure 7. Terminal Block

3. Connect the wires from the time clock auxiliary switch to the two terminals. Use AWG #14 ga copper wire with a temperature rating of 105°C or greater.

The length of the wire between the heater and the time clock should not exceed 15 feet. The contact points of the time clock switch should be silver, or a low resistance alloy.

2G. Water Piping

You can connect high temperature plastic piping (CPVC Schedule 80) directly to the inlet/outlet header if local codes allow it, and the controls keep the filter pump running at least 15 minutes after the heater is turned off.

The heater has 2" universal header couplings. You can connect threaded 2" iron pipe, unthreaded 1-1/2" iron pipe, 1-1/2" or 2" copper pipe without an adapter and CPVC pipe by removing the cast iron flanges and installing the "No Sweat"™ flanges provided with the heater (see Fig. 8).

You can use plastic materials in pipes, fittings, grids and other elements of the filter system if acceptable by the authorities having jurisdiction. If unacceptable, use a metal "heat sink" pipe between the filter and the heater as shown in Figure 10.

Install a check valve if there is any chance of

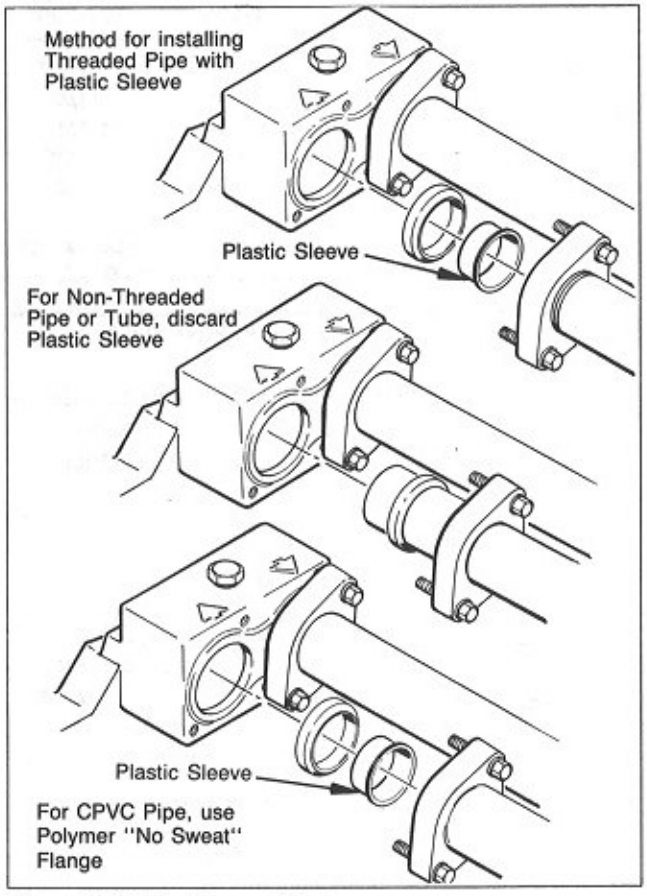

Figure 8. Piping Connections

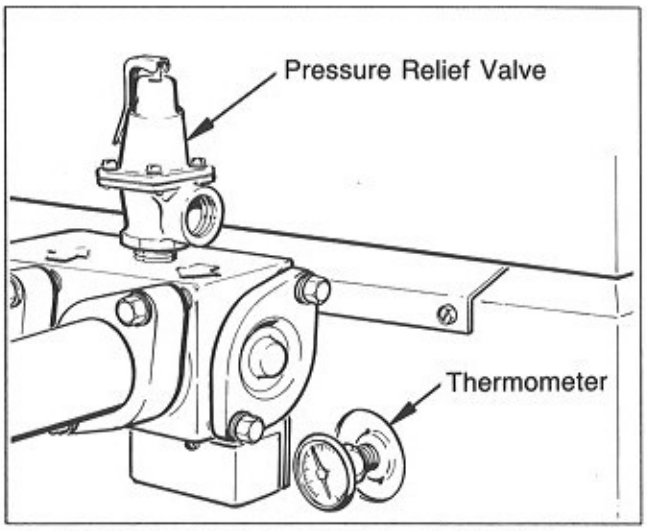

Figure 9. Thermometer and Pressure Relief Valve Location

"back-siphoning" when the pump stops. Do not install any other valve or variable restriction in the piping between the heater outlet and the pool, unless it is being used as a diverter valve.

2G-1. Automatic Chlorinators (Chemical Feeders)

An excessive concentration of chlorine (or other chemical) in the pool heater can be very destructive. Heater damage caused by an excessive concentration of chlorine is not covered by the Teledyne Laars warranty. See Section 3H for recommended levels.

IMPORTANT: Equip the chlorinator with an anti-siphoning device so that chlorine will not siphon into the heater after the pump shuts off.

Wire the chlorinator so it cannot operate unless the filter pump is running. If the chlorinator has an independent clock control, be sure the filter and chlorinator clocks are synchronized.

If the chlorinator is equipped with its own pump, install it so that it introduces the chlorine downstream from the heater, and, if possible, below the level of the heater outlet fitting.

2H. Pressure Relief Valve

A pressure relief valve is not furnished with the Series 2 heater except in Canada. Local plumbing codes may require it. To install a pressure relief valve, remove the 3/4" brass plug on top of the header and screw in the valve (see Fig. 9). The setting of the valve should be at or below the lowest working pressure of any component in the filter system.

2J. Pressure Switch Adjustment

The pressure switch is pre-set at the factory for normal pool installations. Do not adjust the pressure switch unless the installation involves special conditions such as:

1. If the top of the heater is installed three (3) feet or more below the surface of the pool.

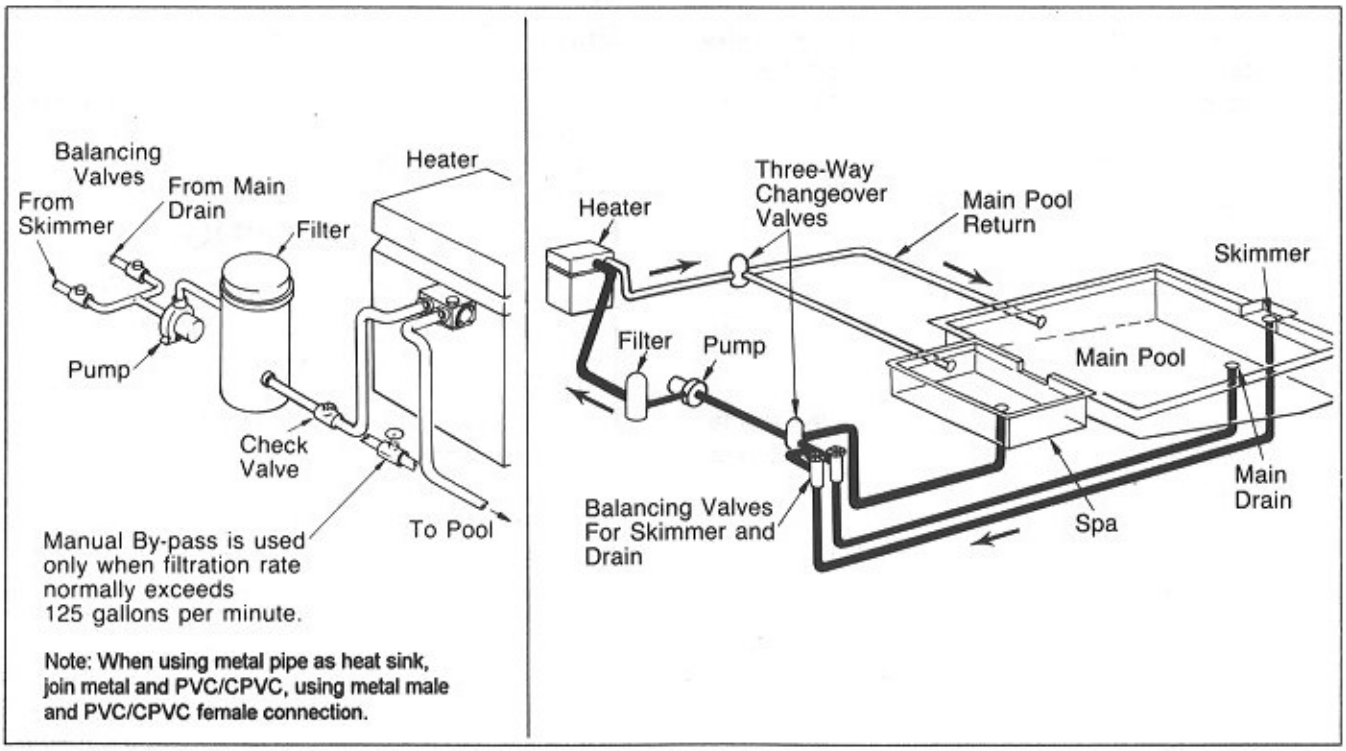

Figure 10. Typical Installation

2. If any part of the filter system piping is three (3) feet or more above the top of the heater jacket.

If either of the above conditions exist, follow the detailed instructions in Section 4C.

NOTE: Do not make the pressure switch adjustment if the heater is installed more than 15 feet below or 6 feet above the pool surface. Consult Teledyne Laars for recommendations.

On some installations, the piping from the heater to the pool is very short. The back pressure could be too low to trigger the pressure switch. If this happens, it may be necessary to install a directional fitting, or elbows, where the return line enters the pool. This will increase back pressure enough for the heater to operate properly.

2K. Temperature Rise

When the installation is complete, the last thing the installer should do is take a temperature rise. Use the data in Table 5 to verify proper water flow through the heater.

An automatic, built-in by-pass valve maintains proper flow through the heater at flow rates less than 125 GPM. If the system filter-flow rate exceeds 125 GPM, a manual by-pass valve is required. Fig. 10 shows a valve installed between the heater inlet and outlet. To set the bypass valve, follow this procedure:

1. Clean the pool filter.

2. With the filter pump off, remove the drain valve. The valve is located on the right side of the heater. Replace the drain valve with a thermometer (see Fig. 9).

3. Close the manual by-pass valve.

4. Make sure the heater is OFF by moving the rocker switch to the "OFF" position.

5. Start the filter pump.

6. After 3 minutes, note and record the thermometer reading (this represents pool water temperature).

7. Follow the procedures on the Lighting and Shutdown label located inside the control compartment to turn the heater on.

8. Let the heater run for at least five minutes before noting and recording the new thermometer reading.

9. If the temperature reading is outside the MIN. MAX. numbers in Table 5, gradually open the manual by-pass valve, counting the rotations, until the temperature rise is obtained (the temperature rise is the difference between the first reading and this one).

10. Be sure the thermometer reading remains steady for at least 3 minutes.

11. Scribe a line on the by-pass valve stem and body to record the position in case it is necessary to repeat the procedure. Remove the handle from the by-pass valve.

SIZE	TEMP. RISE,°F (°C) MIN.	MAX.	FLOW RATE MIN (GPM)
125	27 (15)	36 (20)	20
175	33 (18)	42 (24)	20
250	33 (18)	42 (24)	25
325	28 (16)	38 (21)	30
400	30 (17)	39 (22)	30

Table 5. Temperature Rise & Minimum Flow Rates

NOTE: Numbers in parenthesis represent degrees Centigrade.

SECTION 3.
Operating Instructions
Section 3A. Start-Up Procedure

FULL LIGHTING AND SHUTDOWN INSTRUCTIONS ARE INCLUDED ON THE LABEL ATTACHED INSIDE THE SERVICE DOOR.

⚠WARNING

Vent pipes, draft hoods, tops and water fittings get hot! These surfaces can cause serious burns, so do not touch these surfaces when the heater is operating. The addition of a vent cap will reduce the temperature on the top.

When lighting or relighting the pilot, always turn the temperature control to its lowest setting. Turn the rocker switch to OFF.

With any new pool or spa installation, operate the filter pump with the heater off long enough to completely clean the water. This will remove any installation residue from the water. Clean the filter at the end of this operation before starting the heater.

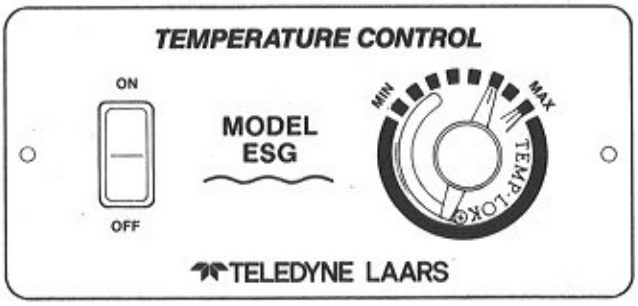

Figure 11. ESG Temperature Control

When raising the temperature of a cold pool, remove all time clock settings. This lets the filter system and heater operate continuously until the water reaches the temperature setting on the thermostat. When that happens, the heater will automatically shut off, but the filter pump will keep running. The filter pump must continue running for at least 15 minutes after the heater shuts off to prevent damage to the system piping.

NOTE: Keep all objects off the top of the heater. Blocking air flow could damage the heater, and void the warranty.

3B. Temperature Control

The temperature control (see Fig. 11) is calibrated at the factory. It covers a range from approximately 70°F (21°C) to 104°F (40°C). Use an accurate pool thermometer to determine the best water temperature for your uses. After positioning the control knob at the desired setting, use the TEMP-LOK to keep it from going any higher.

3C. Lighting and Shutdown

3C-1. Lighting the Heater

⚠WARNING

For your safety when lighting the heater, keep your head and face well away from the lower firebox opening to prevent any risk of personal injury.

Full lighting and shutdown instructions can also be found attached to the wall inside the control compartment door.

1. Remove the service door on the front of the heater. Make sure the gas valve control knob is in the OFF position. If not, turn the knob clockwise to the PILOT position, then depress slightly and continue turning clockwise to OFF (see Fig. 12).

⚠WARNING

For LP Gas: To avoid possible injury, fire and explosion, read and follow these precautions and all instructions on this appliance before lighting the pilot. This appliance uses LP (Propane) gas which is heavier than air and will remain at ground level if there is a leak. Before lighting, sniff at ground level. If you smell gas, follow these rules:

1. DO NOT light matches. DO NOT turn electric lights or switches on or off in area. DO NOT use an electric fan to remove the gas from area.
2. Shut off gas at LP tank.
3. Telephone gas company and fire department for instructions. Give your name, address and phone number.

If your LP tank runs out of fuel, turn off gas at the appliance. After the tank is re-filled, the appliance must be re-lit according to the instructions located on the inside of the door. DO NOT attempt repairs on the gas control or appliance.
Tampering is dangerous and voids all warranties.

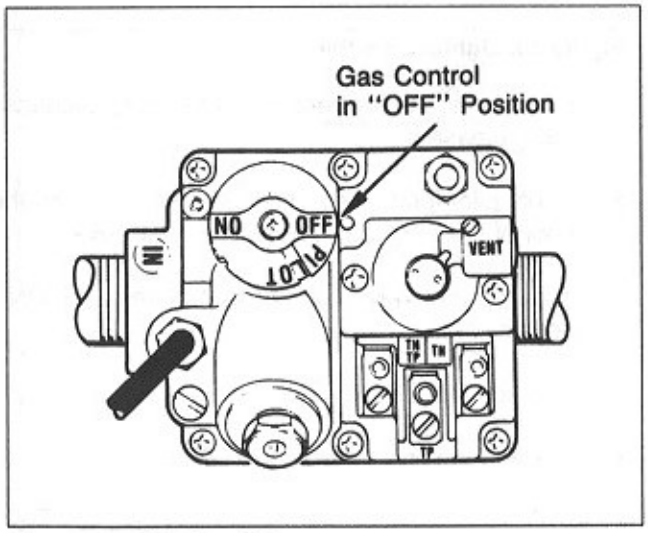

Figure 12. ESG Gas Valve

2. **Wait 5 minutes.** It takes that long for the natural air flow to clear any buildup of unburned gases from the combustion chamber. These gases could ignite if you try to light the heater too soon.

3. Turn the gas valve control knob counter-clockwise to the PILOT position.

4. To light the pilot, push the gas valve control knob down and rotate the sparker knob (see Fig. 13).

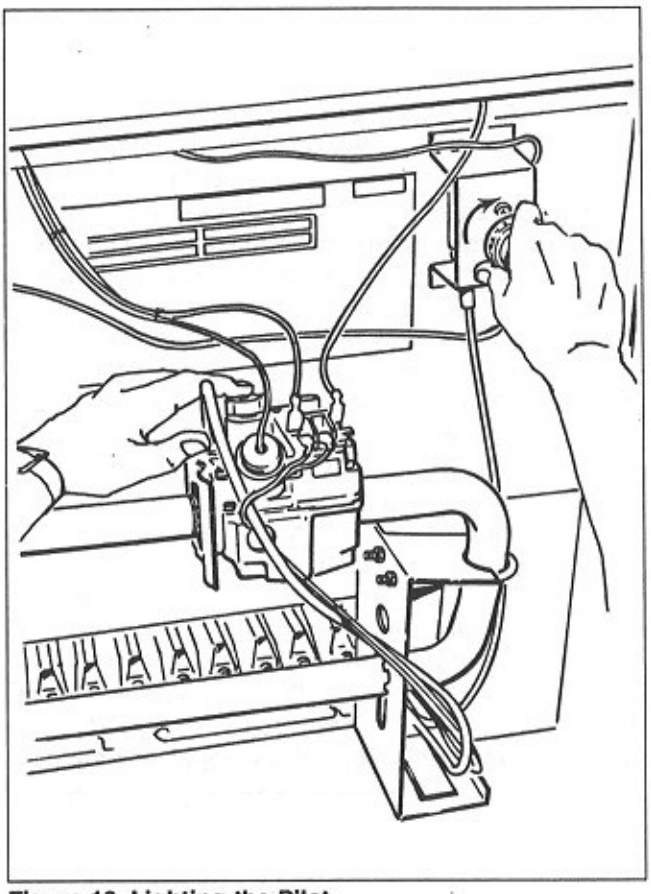

Figure 13. Lighting the Pilot

5. Hold the gas valve knob down for thirty seconds, then release it.

6. Verify pilot ignition by looking in the mirror on the floor of the enclosure, under the gas valve.

7. Turn the gas valve counter-clockwise to the ON position.

8. Replace the service door.

9. Position the rocker switch to ON.

10. Set the temperature control against the TEMP-LOK tab. The heater should come on. Until the water reaches a temperature of about 70°F (21°C), it is normal to have some water accumulating in the base of the heater.

11. Set the time clock if one is installed.

3C-2. Relighting

If the pilot goes out, repeat steps 1 through 11.

NOTE: If over-heating happens, or the gas supply fails to shut off, turn off the main burners only. You can either position the rocker switch to OFF, or open the service door and rotate the gas valve knob to PILOT.

For a complete shutdown, open the service door, rotate the gas valve knob clockwise to PILOT. Depress the knob slightly and continue turning clockwise to OFF, or turn off the manual shutoff valve located outside the heater.

3D. Outlet Piping Temperatures

Even though the heater will be running, the outlet piping will not feel hot to the touch.

3E. Spring and Fall Operation

During periods of cold but not freezing weather, turn the thermostat down to the MIN setting if you are only going to use the pool once in a while. This will prevent the pool from becoming chilled. It will require the least amount of time to raise the water temperature back up where you want it.

If you are not going to use the heater for a long period of time, shut it down completely. Follow the instructions in Sec. 3C-2.

In areas subject to only short freeze periods, turn off the heater and run the filter pump continuously for the length of the cold period.

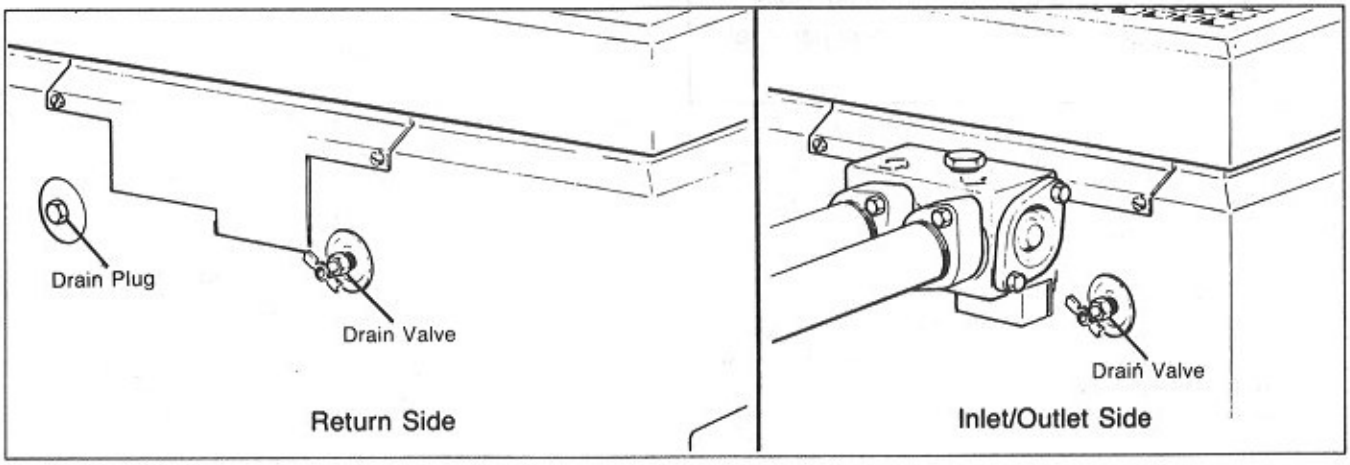

Figure 14. Heater Drain Locations

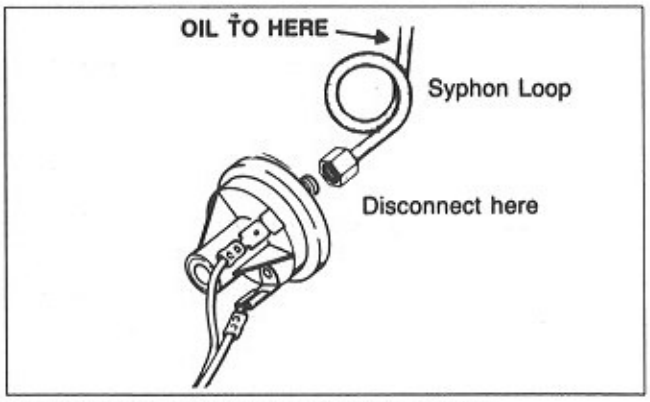

Figure 15. Pressure Switch Copper Tubing

3F. Winterizing

In areas where freezing temperatures occur and you don't plan to use the pool or spa, have your service technician perform the following steps:

1. Shut off the gas valve.

2. Completely drain the heater before the first frost. To drain the heater, remove the drain plugs and open all of the drain valves (see Fig. 14). After the heater is drained, remove the valves. Make sure there is no mineral buildup in the openings.

3. Grease the threads in the header for winter protection, but don't close them off.

4. Disconnect the pressure switch copper tubing.

NOTE: When attaching the copper tubing to the pressure switch in the Spring, fill the loop with SAE 50, non-detergent oil as indicated in Figure 15.

5. Use compressed air to blow out any standing water in the heat exchanger.

3G. Water Chemistry

3G-1. For Pool

Due to natural evaporation and the addition of algicidal and sanitizing chemicals, the mineral content of swimming pool water increases daily. If the mineral concentration in the pool gets too high, the minerals will precipitate out of the water and deposit on the walls of the pool, in the filter system, and in the heater tubes. To protect your heater from damage, you must take the precaution of maintaining the pH factor of the pool water between 7.4 and 7.6. Do not place chemicals in the.pool skimmer drain.

3G-2. For Spa

The control of chemical balance in a spa is more critical than a swimming pool for satisfactory heater operation.

Usage density in a spa is many times greater than a swimming pool. The size, higher water temperature, and heavy usage, mean chemical values in spas can differ greatly. The lack of the right chemical content can result in unsanitary water conditions, and affect the life of the heater.

Maintaining sanitary water conditions in a spa can only be done by regular water changes and the addition of sanitizing chemicals.

3G-2a. Corrosion

The corrosive action of spa water is increased by the following:

a. Low pH - acidity
b. Low Total Alkalinity - bicarbonates
c. Low Calcium Hardness - soft water

NOTE: Teledyne Laars does not warrant heat exchangers damaged by corrosive water.

3H. Testing

Teledyne Laars recommends that owners purchase a test kit and use it regularly. A minimum kit is one which will measure chlorine, pH level and alkalinity.

TEST	RECOMMENDED LEVEL
Free Chlorine	1.0 - 3.0 ppm
Bromine	2.0 - 4.0 ppm
pH	7.2 to 7.6
Total Alkalinity (T.A.)	100 - 150 ppm
Calcium Hardness (CH)	200 - 400 ppm
Langelier Saturation Index (SI)	-0.5 to +0.5
Cyanuric Acid	30 - 150 ppm
Total Dissolved Solids (TDS)	Less than 1000 ppm
Copper	0 ppm

Table 6. Chemical Levels

The pool or spa owner should have a professional service technician perform more extensive chemical testing and water changing.

3J. Therapeutic Pool (Spa) Safety Rules

Therapeutic pools, or spas, are piped so that very warm water, often with air injection, enters a confined area of a swimming pool or a small separate pool at high velocity. The use of these pools can be hazardous unless you comply with the following U.S. Consumer Product Safety Commission "Safety Rules for Hot Tubs."

1. 104°F (40°C) is the maximum temperature for spa or hot tub water. 100°F (37°C) is considered safe for a healthy adult. Special caution is recommended for young children.

2. The drinking of alcoholic beverages before or during spa or hot tub use can cause drowsiness which could lead to unconsciousness, and subsequently result in drowning.

3. **Pregnant women beware!** Soaking in water above 102°F (38.5°C) can cause fetal damage during the first three months of pregnancy (which could result in the birth of a brain-damaged or deformed child). If pregnant women are going to use a spa or hot tub, they should make sure the water temperature is below 100°F (37°C).

4. Check the water temperature with an accurate thermometer before entering a spa or hot tub. Thermostats may vary by as much as 4°F.

5. Persons with a medical history of heart disease, circulatory problems, diabetes, or blood pressure problems should consult their physician before using a hot tub or spa.

6. Persons taking any medication which induces drowsiness, such as tranquilizers, antihistamines, or anticoagulants should not use spas or hot tubs.

7. Prolonged immersion in hot water can induce hyperthermia.

Hyperthermia occurs when the internal body temperature reaches a level several degrees above the normal body temperature of 98.6°F (37°C). Symptoms include dizziness, fainting, drowsiness, lethargy, and an increase in the internal body temperature.

The effects of hyperthermia include:

1. Unawareness of impending hazard
2. Failure to perceive heat
3. Failure to recognize need to leave spa
4. Physical inability to leave spa
5. Fetal damage in pregnant women
6. Unconsciousness resulting in a danger of drowning

3K. Swimming Pool Energy Savings Tips

Teledyne Laars offers the following recommendations to help conserve fuel. These recommendations will reduce the cost of operating your pool heater without sacrificing comfort.

1. The Red Cross recommends a maximum water temperature of 78°F (25°C). Use an accurate pool thermometer. A difference of 4 degrees, from 78°F (25°C) to 82°F (28°C), will use as much as 40% more gas.

2. Carefully monitor the water temperature of your pool in the summer time. You can reduce heater usage due to warmer air temperatures.

3. Find the proper setting on the pool heater temperature control. Use the TEMP-LOK to discourage further adjustments.

4. Set the filter time clock to start the pump no earlier than 6:00 AM during the pool heating season. This is the time when nightly heat loss balances.

5. If the pool is only going to be used on weekends, reduce the heater thermostat setting by 8 or 10 degrees during the week. Reset it to the 78°F (25°C) level a day or so before you plan to use the pool.

6. During the winter, and when on vacation for longer than a week, follow the instructions in Section 4A-3 and 4-F to shut down the heater.

7. Where possible, shelter the pool from prevailing winds with well-trimmed hedges or other landscaping, cabanas, or fencing.

8. Always use a pool cover when practical. Besides providing a valuable safety feature, a pool cover will reduce heat loss, conserve chemicals, and reduce the load on filter systems.

3L. Periodic Inspection

⚠WARNING

Improper installation or maintenance can cause nausea or asphyxiation from carbon monoxide or flue gases which could result in severe injury or death.

Teledyne Laars designs and constructs the Series 2 heater for a long performance life when installed and operated properly under normal condi-

tions. Have regular inspections at least annually by trained service personnel to keep the heater operating efficiently. The service technician should check the following:

1. Keep the top of the heater clear of all debris. Make sure there is no collection of flammable materials, leaves, paper, etc. under the heater.

2. Inspect the internal surfaces of the heat exchanger tubes annually. Remove any buildup of scale.

3. Inspect the external surfaces of the heat exchanger tubes for soot buildup by placing a mirror between and under the burners when the heater is firing. Remove soot if it has collected on the tubes, and correct the cause.

4. Check for spider webs in the pilot and main burner orifices - especially at Spring start-up.

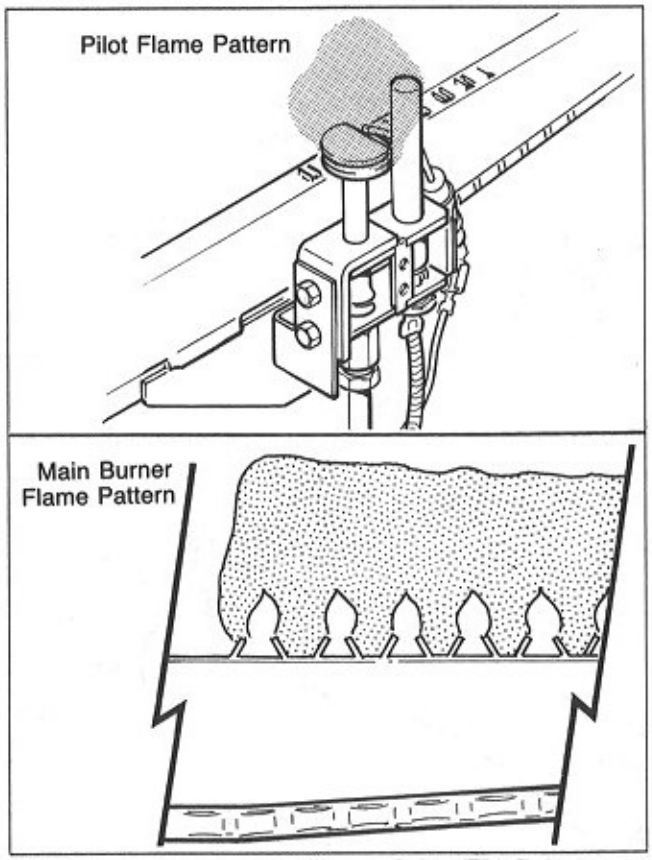

Figure 16. Pilot and Main Burner Patterns

5. Make a regular visual check of the main burner and pilot flame patterns. They should resemble Fig. 16.

6. Inspect the gas and millivolt controls annually to assure safe and dependable operation. Specifically, check the following:

   a. High Limit Switch
   b. Pressure Switch
   c. Automatic Gas Valve
   d. Temperature Control

Controls can deteriorate over a period of years. A regular inspection schedule, with repair or replacement as needed, will keep the heater performing properly.

7. Keep the pool heater area clean and free of all combustible materials, gasoline and other flammable vapors and liquids.

8. Do not use the heater if any part has been under water. Immediately call a qualified service technician to inspect the heater and to replace any part of the control system and any gas control which has been under water.

Keep this manual in a safe place for future reference by you and your qualified service technician when inspecting or servicing the heater.

SECTION 4. Maintenance

IMPORTANT: A professional service technician, qualified in pool heater maintenance should use the material in this section for testing and repairing the heater. It includes step-by-step procedures for trouble-shooting the electrical control system and other parts of the heater. Review these procedures before beginning repairs.

4A. Gas Pressure Tests

One of the first steps in trouble-shooting the heater should be checking inlet and manifold gas pressure with a manometer. A manometer kit is available from Teledyne Laars.

All of the other parts of the pool system have an effect on heater operation. These parts include the pump, filters and strainers, valves, gas supply, and time clocks. Before going on with these heater-related trouble-shooting procedures, make sure the pump is operating properly, the filter and strainers aren't clogged, there are no closed valves in the piping system, and the time clocks are properly adjusted. If all of these components check out, then proceed with the following trouble-shooting procedures.

4B. Electrical Trouble-shooting

The following step-by-step procedures will

identify problems which may cause heater malfunctions. Before starting these procedures, review the information in the Installation and Operation sections of this manual. Make sure every other part of the pool system is operating properly before starting this procedure.

Safety

1. Develop a routine for trouble-shooting heaters.
2. Keep all chemicals away from heaters.
3. Never put your face near the lower section of a heater after you have turned the gas on, or it is firing. Use a mirror to inspect the flame pattern.

Tools Needed

1. A good multimeter with a 2 volt DC scale and a 200 MV scale.
2. A manometer for testing gas pressure.
3. A Pete's plug and thermometer to measure temperature rise.
4. Basic hand tools.
5. A hand mirror.
6. A back pressure tester.

General

1. Make sure the pool filter system is clean.
2. Make sure all electrical connections are tight, and none of the wires are frayed or broken. Replace them if necessary.
3. Make sure the heater model number agrees with the wiring diagram.
4. Follow this test procedure one step at a time. Do a test, correct any problem discovered, then go to the next step.
5. Take your time. Don't rush a test, and don't skip any of the steps in a sequence.

This part of the trouble-shooting guide will cover four problems:

4E-1. Pilot will not light.
4E-2. Pilot will not stay lit.
4E-3. Main burners will not light.
4E-4. Intermittent operation.

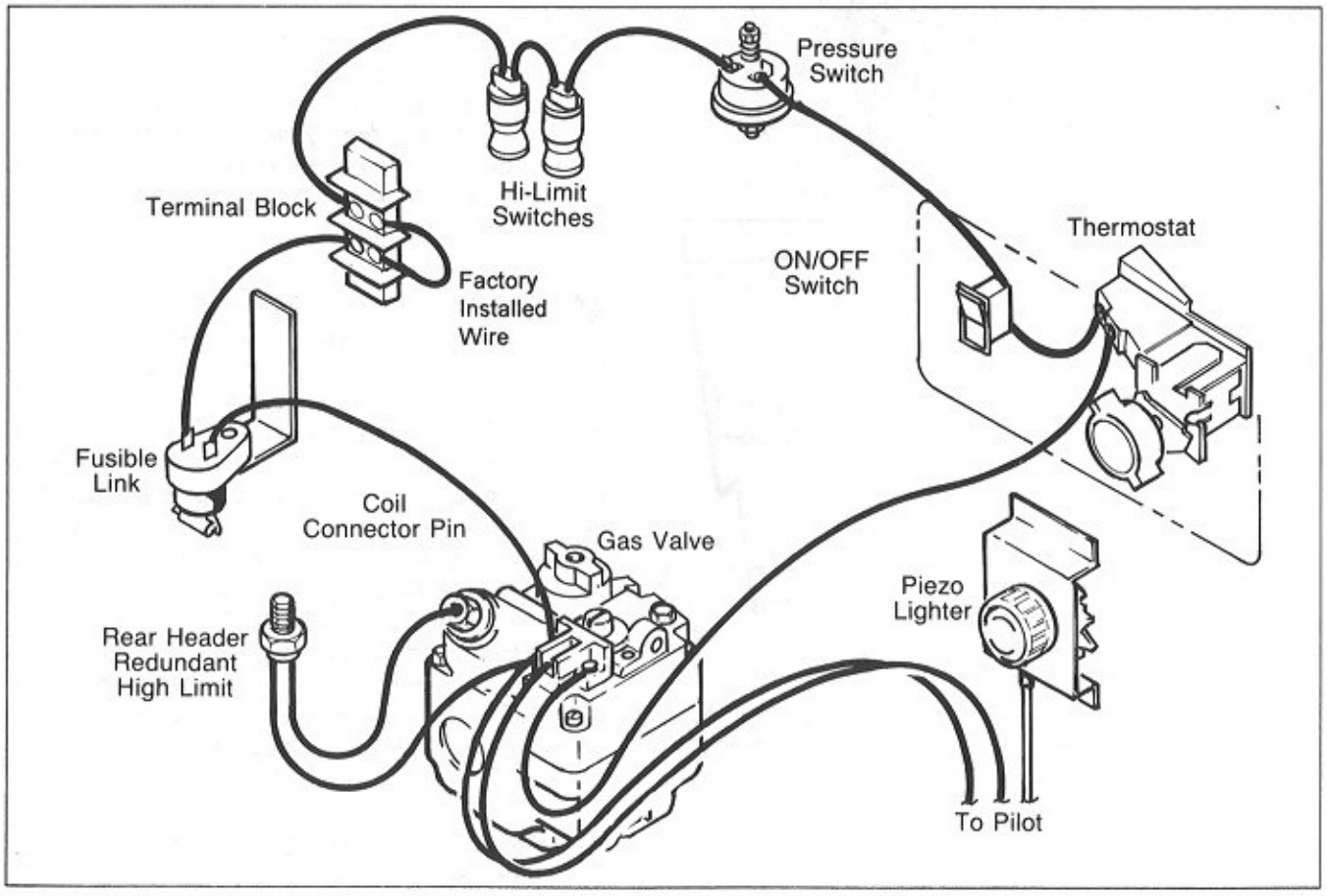

Figure 17. ESG Wiring Diagram

Follow the lighting instructions in the Operation section of the manual to light the pilot (these instructions are also located inside the heater front panel).

4B-1. Pilot Will Not Light

The first thing to check is the supply gas pressure. If the supply gas pressure is low, check these possible causes:

a. Improper installation.
b. The gas meter is too small.
c. The gas line is too small or restricted.
d. Too many appliances sharing the gas line.
e. Manual gas valves outside the heater are closed.

If the manometer test shows the main supply gas pressure is high enough, but the pilot will not light, check the following:

a. Is the pilot burner dirty or clogged?
b. Is the Piezo lighter sparking (see Fig. 18)?
c. Does the pilot have the correct orifice?
d. Is the pilot burner gas tube loose or detached?
e. Is the pilot properly aligned (see Fig. 19)?

These questions can only be answered by removing the burner tray from the heater jacket. Follow the procedures in Section 4F to pull the burner tray out far enough to check the pilot.

With the wire still attached between the Piezo lighter and the pilot, twist the Piezo knob to verify it is sparking at the pilot. If not, replace the Piezo lighter assembly.

After answering these questions, and correcting any problems, the pilot should light.

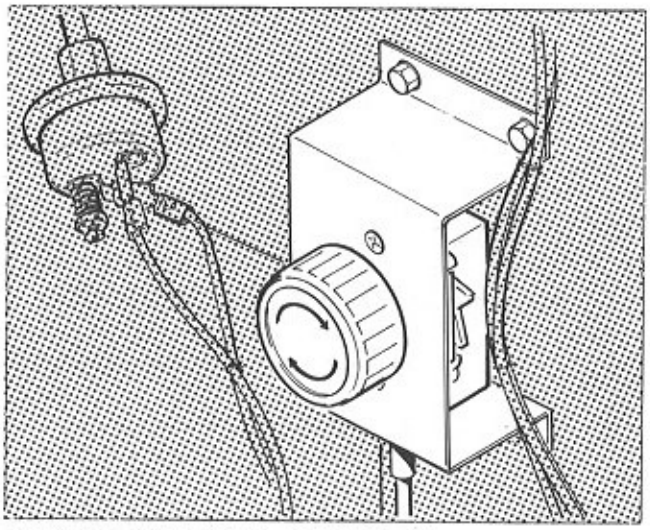

Figure 18. Sparker (Piezo) Pilot Lighter

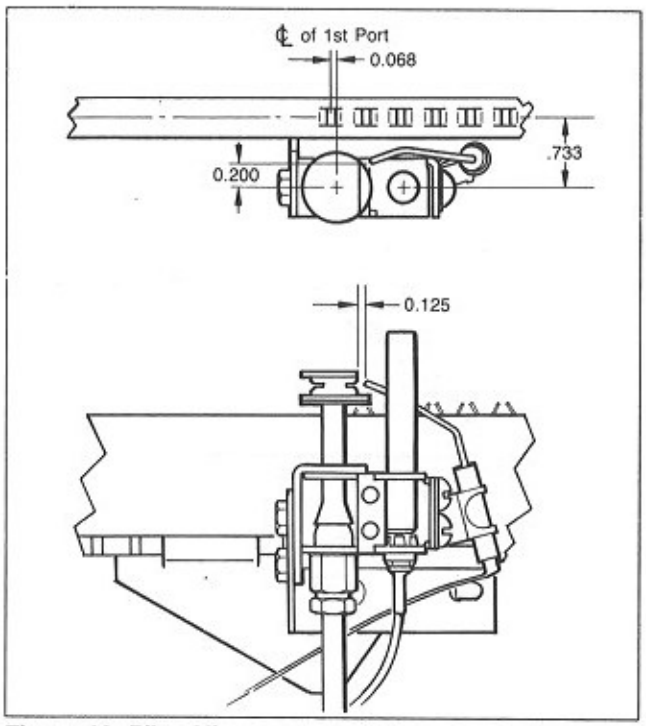

Figure 19. Pilot Alignment

4B-2. Pilot will not stay lit.

If the pilot does not stay lit when you release the gas valve knob, There are four possible reasons:

1. Pilot generator
2. Redundant high limit
3. Wire harness.
4. Gas valve

Perform the following electrical test to determine the problem.

1. Set the temperature control knob to the lowest setting, and turn the rocker switch to OFF.

2. Remove the red wire from gas valve terminal TP. Attach the red multimeter lead to the wire.

3. Touch the black meter lead to terminal TH/TP on the gas valve (see Fig. 20).

4. Set the meter on the 2 volt DC range.

5. Turn the knob on the gas valve to PILOT.

6. Push the knob down and twist the sparker to light the pilot. Hold it down for at least 30 seconds.

7. When the pilot lights, the meter should build up to about 500 MV while you are holding the knob down.

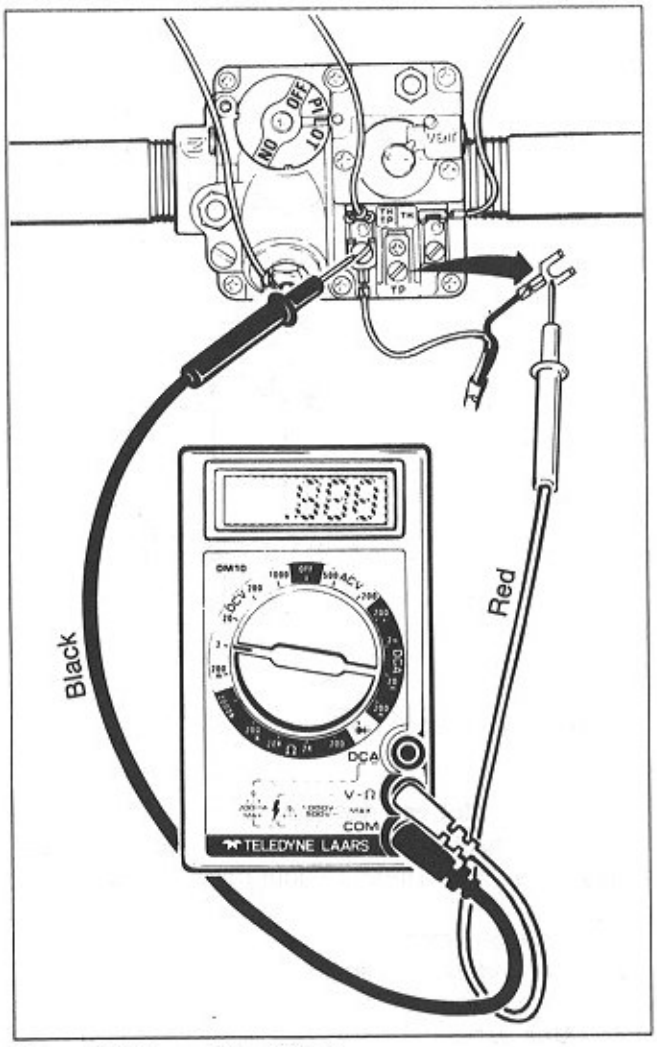

Figure 20. Open Circuit Test

8. If the meter does not register at least 500 MV, replace the pilot generator.

9. Secure the red wire back on terminal TP.

10. Attach the black multimeter lead to terminal TP on the gas valve (see Fig. 21).

11. Attach the red lead to terminal TH/TP.

12. Push the knob down to light the pilot.

13. If the meter registers less than 500 MV after the pilot lights, release the knob. If the pilot does not stay lit, check the following:

The pilot generator is weak or defective. Test the generator by moving the wires where they attach to the generator and watch the meter. If the meter reading jumps, replace the generator.

If the pilot generator checks out, test for shorts or grounded wires.

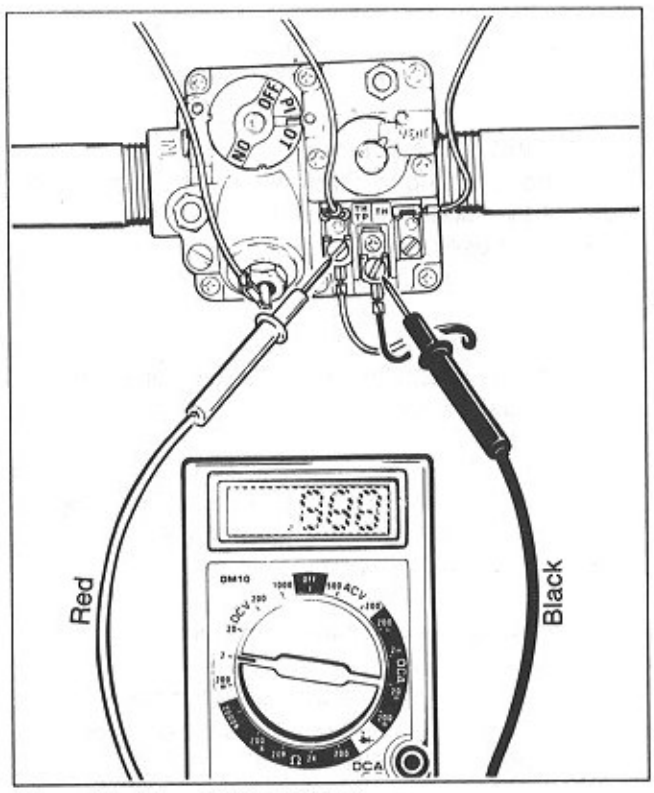

Figure 21. Closed Circuit Test

Redundant High-limit Test (see Fig. 22)

a. Attach the black meter lead to terminal TP.

b. Light the pilot, and keep holding the knob down.

c. Touch the red meter lead to the gas valve coil connector pin.

If the meter registers 500 MV, replace the gas valve. If no voltage, replace the redundant high-limit.

4B-3. Main Burners Will Not Light

If the main burners fail to light when there is a call for heat, check the following possible causes.

a. Is the filter pump ON?

b. Is the filter clean, and is water flowing to the pool?

c. Is the ON/OFF toggle switch ON?

d. Is the gas valve knob in the ON position?

e. Is the thermostat set to the maximum position?

f. Is the "Fireman" switch and time clock ON?

g. Are all auxiliary items turned ON (remote thermostat, air switch, override switch, etc.)?

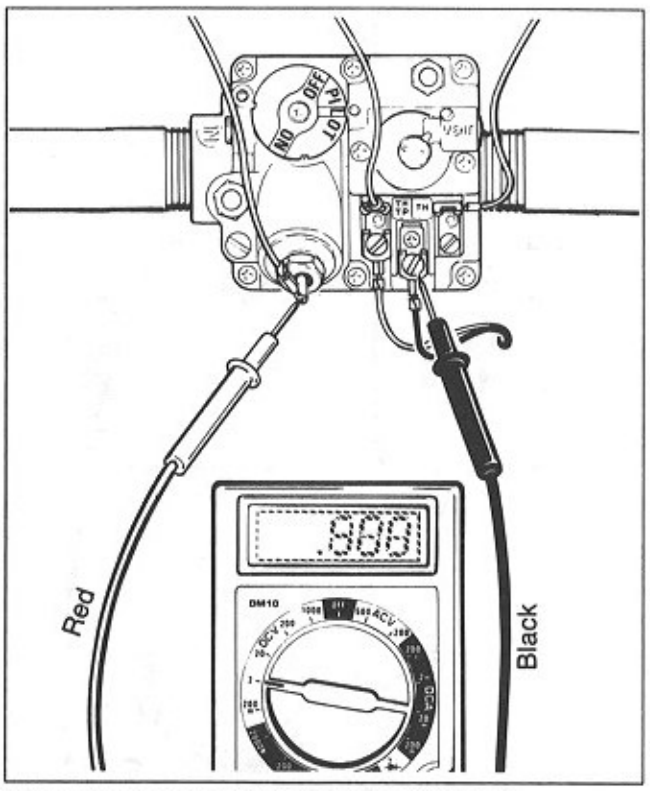

Figure 22. Redundant High-limit Switch Test

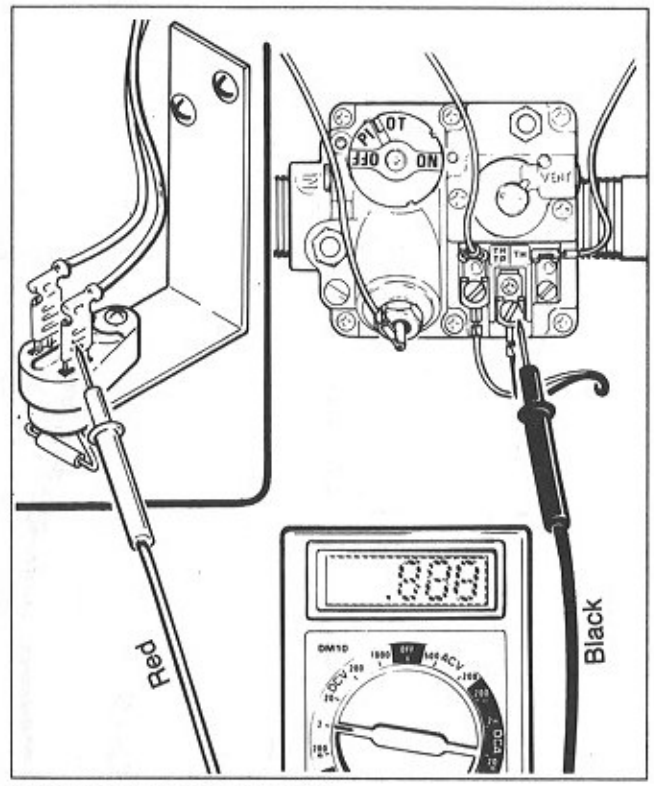

Figure 23. Fusible Link Test

h. Is the pilot ON?

If the answer to all of the above questions is YES, then continue to the next series of tests. Keep in mind that if the pilot is lit, there is voltage in the circuit. These tests are to determine where the break in the voltage is occurring.

Fusible Link (see Fig. 23)

Place one meter lead on terminal TP on the gas valve (this lead will stay on terminal TP during all of these tests) and the other lead on each fusible link terminal. If the meter shows voltage at one terminal but not the other, replace the fusible link.

A bad fusible link can be symptomatic of an installation problem. Check for downdrafts or sooting.

High-limit Switches (see Fig. 24)

With one meter lead still attached to terminal TP, touch the other meter lead to the white wire terminal of the pressure switch. If the meter shows at least 500 MV, the high limits are good. If no voltage, test the high limit switches individually.

To test the limit switches individually, remove the limit switch cover located under the In/Out header. Remove the high limit retainer bracket. Pull the two high limits out of their cavities. Test them using the following procedure:

1. Pull the black insulation away from the silver limit switch to expose the terminals.

2. Keep the black meter lead attached to terminal TP on the gas valve. Touch the other meter lead to the terminals on the silver high limit switch. If there is voltage at one terminal and not the other, replace the high limit.

3. Repeat the same procedure for the red high limit switch.

4. Make sure both high limits are good by touching the meter lead to the white wire terminal on the pressure switch again. Push the black insulation back up to cover the terminals completely before replacing them in the In/Out header.

5. When replacing the high limits in the header, the red one goes in the lower cavity. The silver one goes in the upper cavity.

Pressure Switch (see Fig. 25)

Keep the black meter lead attached to terminal TP on the gas valve. Touch the other lead to the black wire terminal on the pressure switch. If there is no voltage, the pressure switch is keeping the heater off. You need to determine whether it's the switch or a back pressure problem.

If a pressure gauge registers 2 pounds or more, the pressure switch could be out of adjustment,

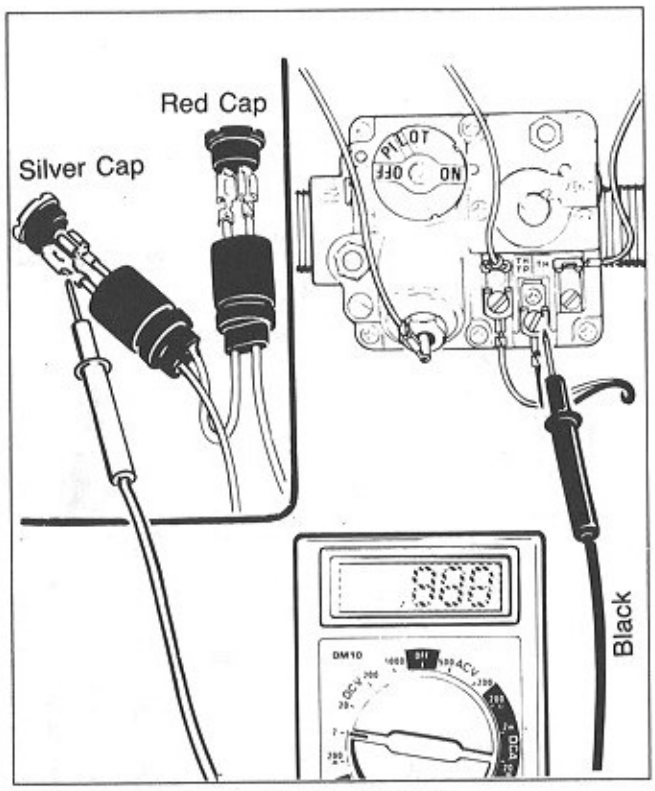

Figure 24. Testing High-limit Switches

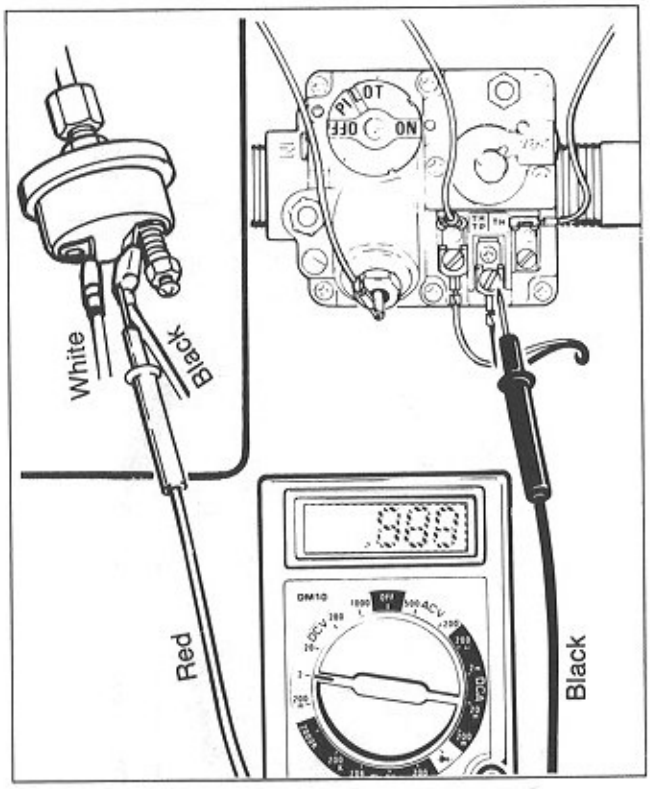

Figure 25. Pressure Switch Test

defective, or the pressure switch tube could be clogged. Repair or replace as necessary.

NOTE: Only adjust the pressure switch to turn the heater off, not on.

Pressure Switch Adjustment
The pool filter must be clean before making this adjustment (see Fig. 26).

1. Turn the control panel rocker switch to OFF.
2. Set the POOL thermostat to MAX.
3. Start the filter pump.
4. Turn rocker switch to ON. Heater should start.
5. Turn the pressure switch adjustment screw counter-clockwise very slowly until the heater goes off.
6. Turn the pressure switch adjustment screw clockwise 1/4 turn. The heater should come back on.
7. **NOTE:** Check the adjustment by turning the filter pump off. The heater should shut off immediately. If it does not, restart the filter pump and repeat Steps 5 and 6. Check the adjustment.
8. Return the pool thermostat to the desired temperature.
9. When the pressure switch is properly adjusted, the heater should come on about 10 seconds after the filter pump is started and shut off right after the pump shuts off.

Thermostat and Rocker Switch (see Fig. 27)
With the black meter lead attached to terminal TP, touch the red meter lead to the TH terminal on the gas valve. If there is no voltage, the thermostat, toggle switch or both are keeping the heater from firing. Test the rocker switch independently by touching the red meter lead to each of the terminals. If the meter registers voltage at one and not the other, the rocker switch is defective. Replace it. If the heater still does not fire, the problem could be the thermostat. Test the thermostat in the same way.

Gas Valve
With one meter lead still attached to terminal TP on the gas valve, touch the other lead to terminal TH. If the meter registers 500 MV and the heater still does not fire, replace the gas valve.

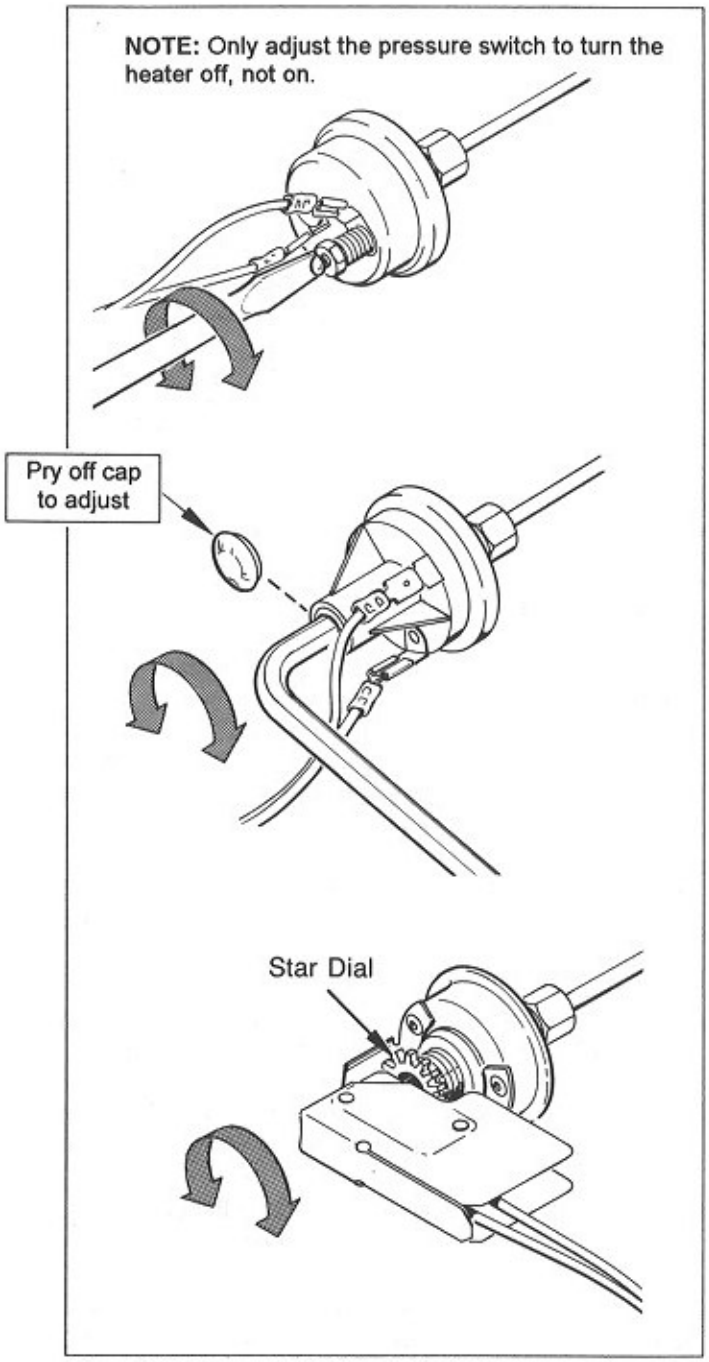

Figure 26. Pressure Switch Adjustment

4B-4. Heater Will Not Shut Off When the Pump is Not Running

The main burners must not fire unless the filter pump is running. This could be an indication of improper installation, or the pressure switch could be out of adjustment.

4C-5. Intermittent Operation (see Fig. 28)

High resistance in the safety circuit can cause intermittent operation, and is a warning of future problems. The following test will determine if there is an excessive voltage drop (high resistance) in any contact or control. Make sure the filter is clean, the

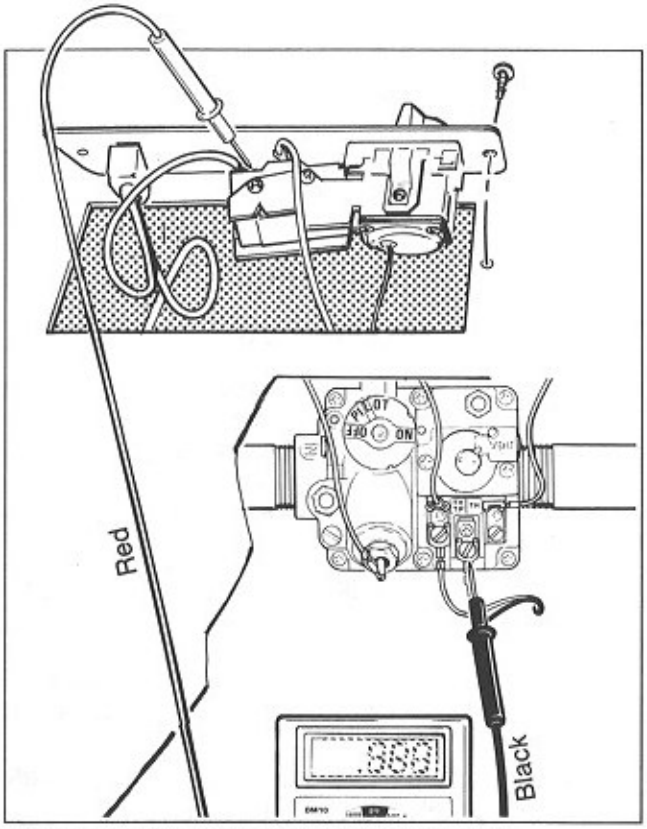

Figure 27. Thermostat & Rocker Switch Test

pump is running and the main burners are firing before performing this test.

Connect a millivoltmeter between TH/TP and TH on the gas valve. A reading of 20MV or less is acceptable. This represents the total voltage drop through the safety controls and wire harness.

Determine the voltage drop across the individual components by using the meter leads to test across the pressure switch, the thermostat, and the high-limit switches one at a time. Add up the individual voltage drops. A total of 20MV or less is acceptable.

If there is more than a 10MV drop across the pressure switch, make sure the terminals are tight.

If there is more than a 10MV drop across the thermostat, check and clean the spade terminals. Tighten terminal screws on the thermostat. If this does not reduce the voltage drop, replace the thermostat.

If there is more than a 10MV drop across the rocker switch, replace the toggle switch.

If there is more than a 10MV drop across the two high-limit switches, check each switch individually. Make sure the terminals are secure. If there is more than a 10MV drop from one high-limit, replace it.

Accessory Equipment

Disconnect all accessory equipment from the heater, such as time clocks. Make sure the heater is properly wired according to the applicable schematic. If the heater fires, the problem is in the accessory equipment and not the heater. Replace or repair the

equipment as needed.

If the heater still does not fire, repeat the above electrical trouble-shooting procedures without the accessory equipment attached. If it still fails to light, consult your local dealer or Teledyne Laars.

4C. Replacing the Gas Valve

⚠WARNING

Never try to repair the gas valve. Such attempts will void the warranty, and could lead to dangerous results. If the gas valve is defective, replace it by following these instructions.

1. Turn off the main gas supply at the manual gas cock or the meter.
2. Follow the shutdown procedures on the lighting and shutdown label to turn off the gas valve.
3. Disconnect the main gas pipe from the gas valve (see Fig. 28).
4. Remove the two screws securing the anti-rotation bracket on the left side of the gas valve.
5. Remove the pilot gas tube from the gas valve.
6. Remove all wires from the gas valve terminals.
7. Unscrew the gas valve from the manifold pipe.
8. Screw the new gas valve onto the manifold pipe, and finish the replacement by reversing the above instructions.
9. Before operating the heater, test the complete gas supply system, including all fittings, for leaks using a soap solution.
10. Follow the lighting instructions located inside the control compartment door.

4D. Removal of Gas Burners

1. Turn off the main line gas valve.
2. Unscrew the gas supply pipe from the gas valve.
3. Disconnect all wires to the gas valve.
4. Remove the two screws securing the anti-rotation bracket to the inner panel, and the three screws attaching the manifold bracket. Slide the burner tray out of the heater (see Fig. 29).

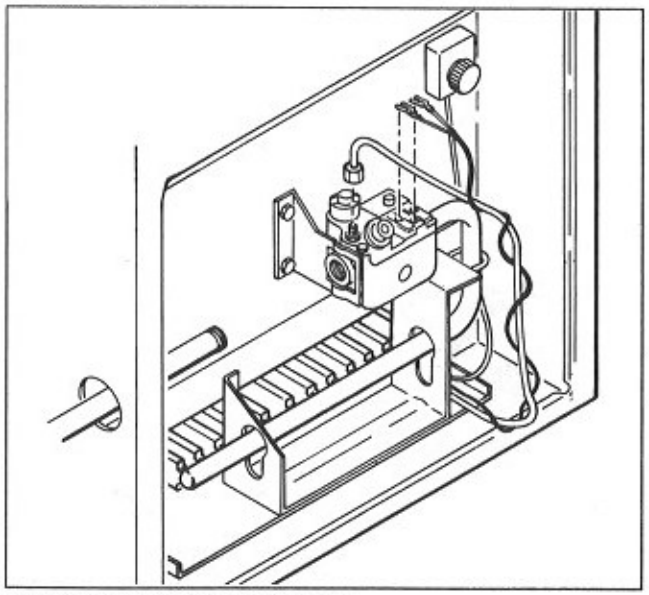

Figure 28. Gas Valve Removal

NOTE: Due to sharp edges on the metal burner, wear protective gloves for the next steps.

5. Grasp the burner firmly, and push it away from the manifold until it is clear of the orifice. Slide it out of the burner tray (see Fig. 29).
6. To replace the burner, insert the rear into the slot at the rear of the burner tray, line it up with the proper orifice and snap it into position.
7. Reinstall the burner tray by sliding it back into the heater and securing it with the two brackets.
8. Connect the gas pipe, turn on the gas supply and check the system for leaks with a soap solution.
9. Reconnect the electrical wires to the gas valve according to the schematic on page 6.

NOTE: If the burner being removed is the one with the pilot attached, follow these additional procedures starting at Step 6.

1. Disconnect the pilot gas tube from the gas valve.
2. Detach the pilot burner assembly from the burner bracket and remove the burner according to the instructions in Step 6.
3. Install the pilot burner assembly on the new burner. Install it in the burner tray and reconnect the pilot gas tube to the pilot assembly and gas valve.

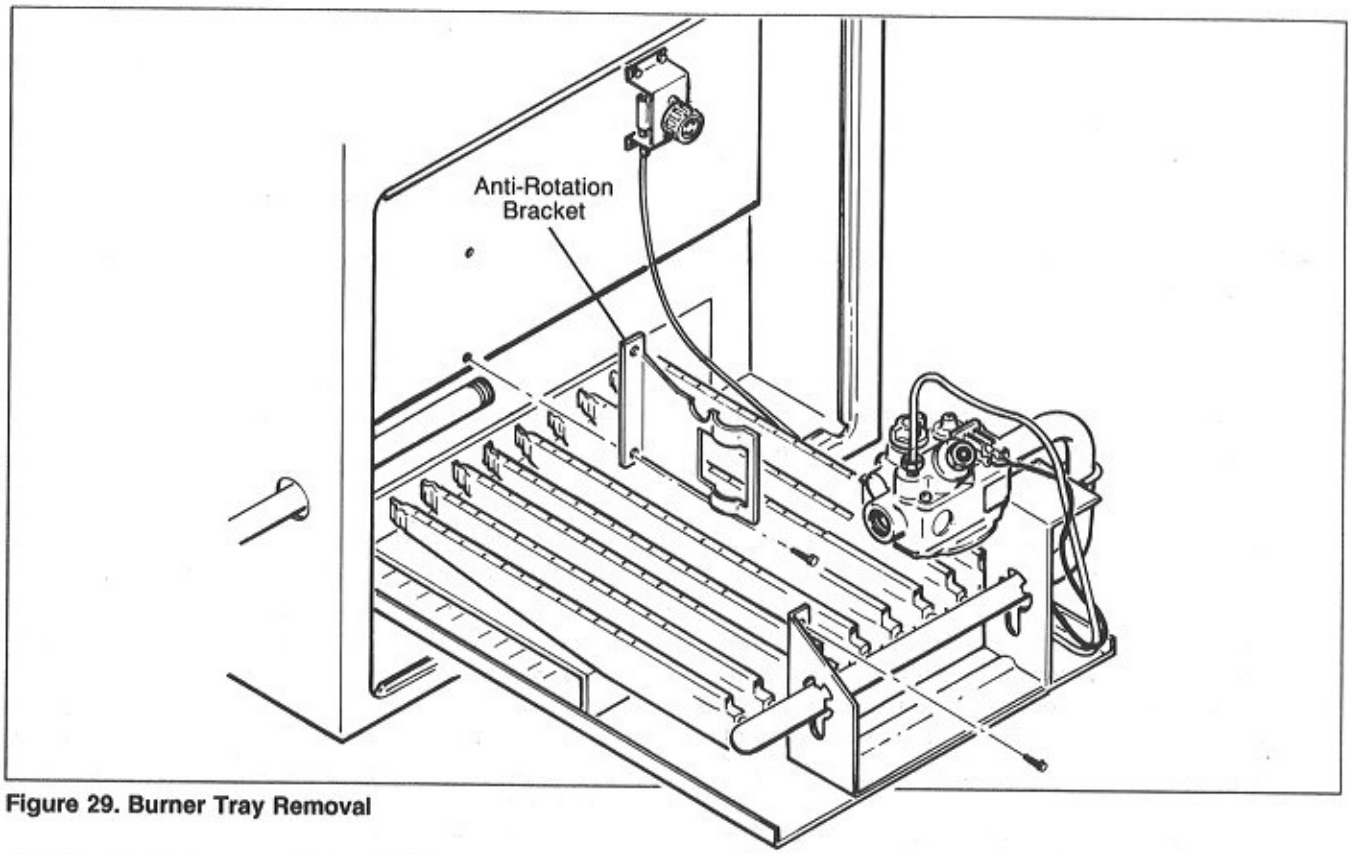

Figure 29. Burner Tray Removal

4E. Periodic Inspection of Heat Exchanger Water Passages

Scale can accumulate inside the heat exchanger tubes. The easiest method of determining the degree of scale buildup is to periodically inspect the tubes. Perform this inspection after sixty days of operation, and after 120 days of operation. This will establish a regular inspection routine.

An inspection and cleaning of the complete heat exchanger can only be accomplished by removing it from the heater (see Fig. 34 and the instructions in Section 5).

4F. Cleaning the Heat Exchanger

⚠CAUTION

Black carbon soot buildup on a dirty heat exchanger can be ignited by a random spark or flame. To prevent this happening, dampen the soot deposits with a wet brush or fine water spray before servicing the heat exchanger. A light accumulation of soot or corrosion on the outside of the tubes can be easily removed with a wire brush after the heat baffles are removed. Follow the instructions in Section 2 to remove the heat exchanger.

1. Dry the heat exchanger completely.
2. Remove the front and rear headers from the tube assembly.
3. Remove the tube baffles.

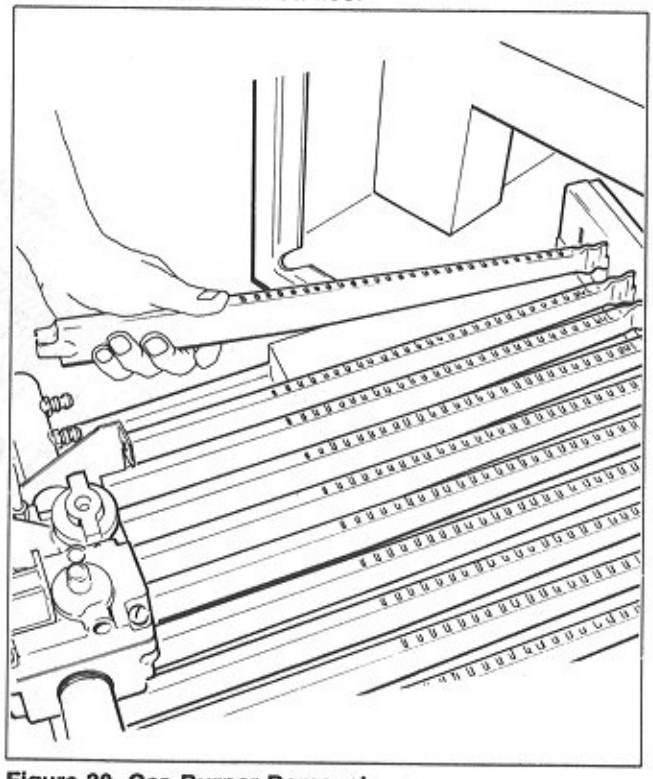

Figure 30. Gas Burner Removal

4. The insides of the tubes can be reamed as illustrated in Fig. 31.

5. Take the reamer out often to remove lime powder and prevent the drill from binding in the tube.

NOTE: Use only the correct carbide tipped reamers which are available from Teledyne Laars.

6. Install new gaskets. Do not use the old ones.

7. Tighten the header bolts progressively, starting with the two center bolts. Maximum torque is 20 foot pounds; do not over-tighten.

8. Pressure test the heat exchanger for leaks with city water supply before re-installing.

9. When placing the heat exchanger back in the heater, carefully hold the refractory insulation blocks apart and lower the exchanger into place. Be sure the sheet metal covers, which protect the insulation blocks, are replaced carefully.

10. If a header bolt is stripped in the process of reassembly, it can be driven out of the header plate and replaced (see Section 6, Parts List).

4G. Automatic Flow Control Valve.

The automatic flow control valve has only one moving part, requires no normal service, and will withstand normal pool water for many years. Extremely high acid or chlorine concentration or hard water could damage valve parts.

To determine if the valve is stuck open, shut off the filter pump and remove the flow control cap. Make a visual inspection of the disc. If it is not properly seated, or does not move smoothly back and forth on the shaft, or if parts are pitted due to corrosion by excessive acid or chlorine in the pool water, they should be replaced (see Section 6, Parts List).

SECTION 5.

5A. Reversible Water Connections

Teledyne Laars ships the heater with the water connections on the right side. It could be necessary, or helpful, to switch the connections to the left side to improve access for service.

To make this change, a trained service technician should reverse the heat exchanger before beginning the installation.

Follow these step-by-step instructions and accompanying illustrations.

1. If there is a vent cap or draft hood (indoor) on top of the heater, remove it.

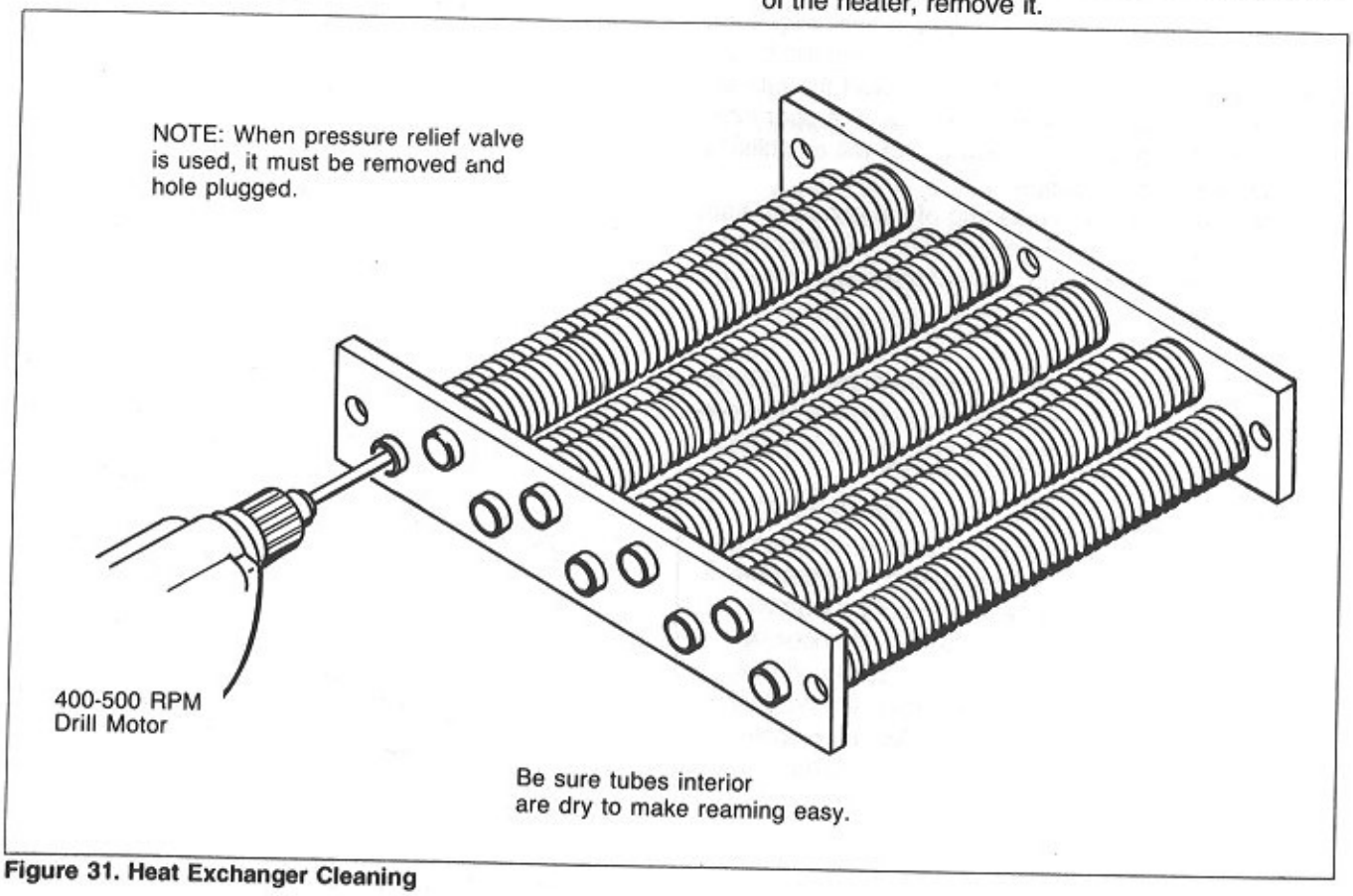

Figure 31. Heat Exchanger Cleaning

2. Remove the hex-head screws shown in Fig. 34 and lift the top assembly straight up.

3. Remove the four screws securing the front rainshield. Set it aside.

4. Remove the two screws securing the rear rainshield and set it aside.

5. Lift off the two side rainshields and set them aside.

6. Remove the 5 screws securing the gap closures and put them aside.

7. Remove the screws securing the two flue collector holddown clamps and remove the clamps (see Fig. 41). Replace these clamps after reversing the heat exchanger.

8. Remove the flue collector assembly by lifting it out of the heater.

9. Remove the three grommets shown in Figure 34.

10. Remove the 2 drain valves (see Fig. 34). One is located under the water connections on the right side. The other is on the left side toward the front of the heater.

11. Remove the front door of the heater.

12. Disconnect the yellow wires from terminal TH/TP and the coil connector on the gas valve (see Fig. 5). Label the white wire on the pressure switch PS and the white wire on the upper terminal of the terminal block TB (see Fig. 36).

13. Disconnect the white wire from the pressure switch, and the white wire at the terminal block.

14. Pull the yellow and white wires out of the front compartment through the top, and coil them on the heat exchanger. Disconnect the black wire from the pressure switch.

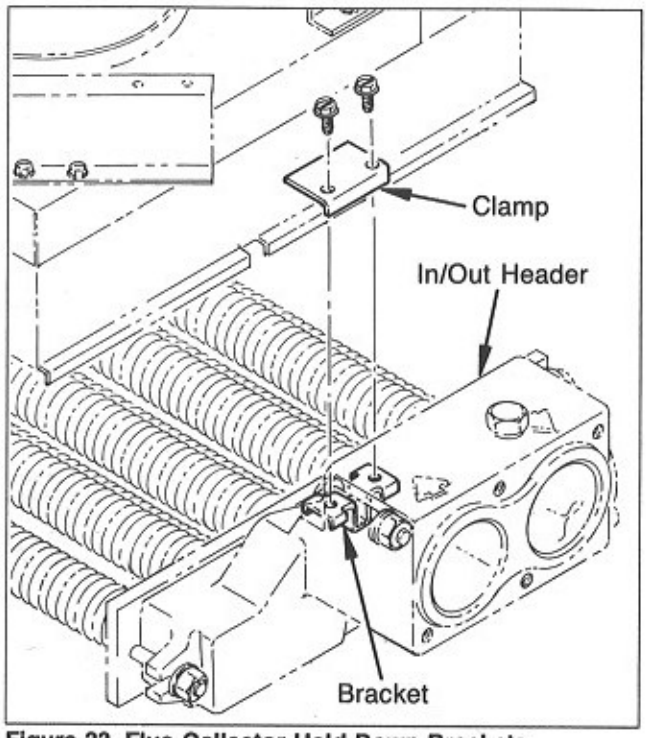

Figure 33. Flue Collector Hold Down Brackets

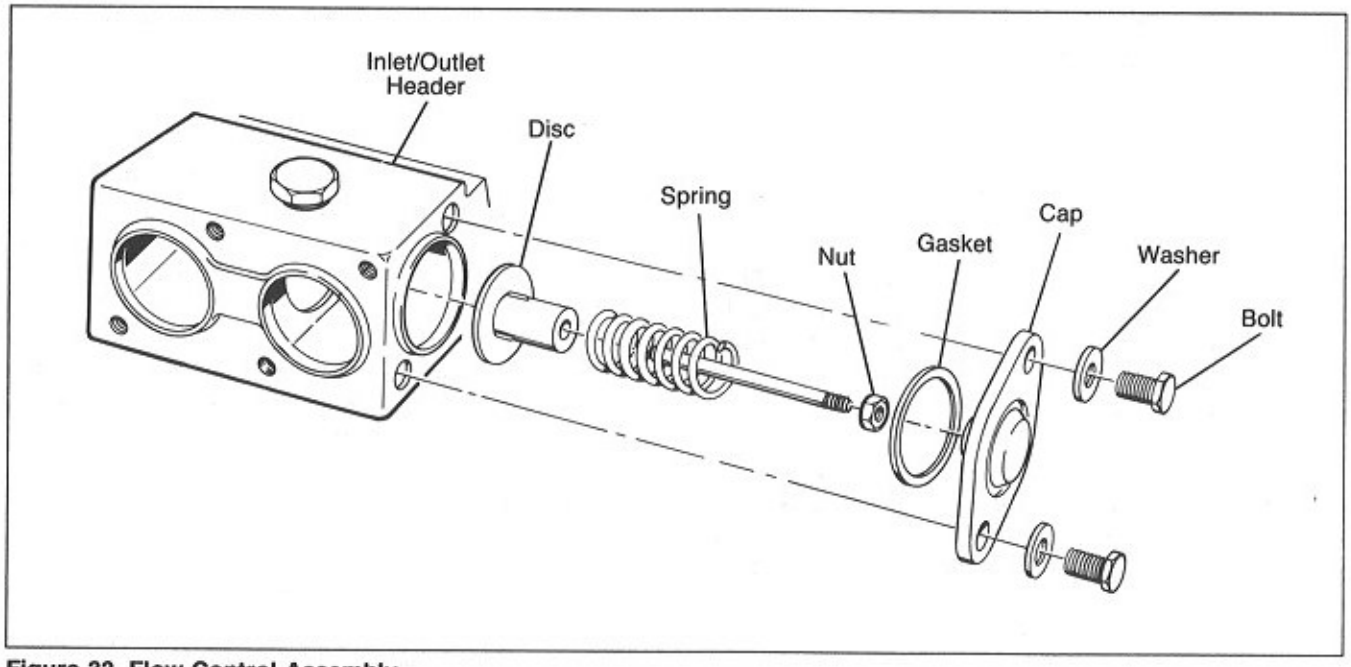

Figure 32. Flow Control Assembly

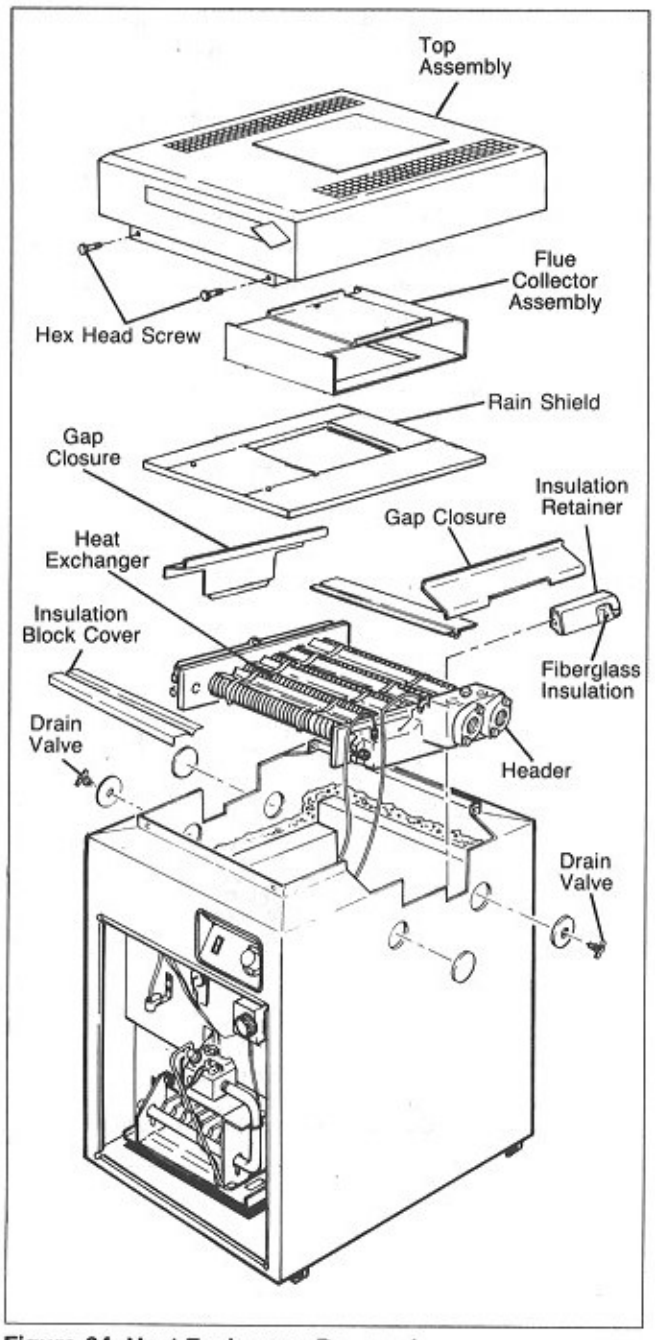

Figure 34. Heat Exchanger Reversal

15. Remove the screw holding the clip behind the pressure switch on the back panel. Disconnect the pressure switch tubing at the In/Out header by loosening the top hex nut. Place the whole assembly in a safe place.

16. Remove the temperature sensing bulb from the back of the header by loosening the cap screw. Slide the retainer bracket off the bulb flange. Keep the fiberglass insulation under the retainer bracket. Remove the bulb from the header and rotate it out of the way (see Fig. 35).

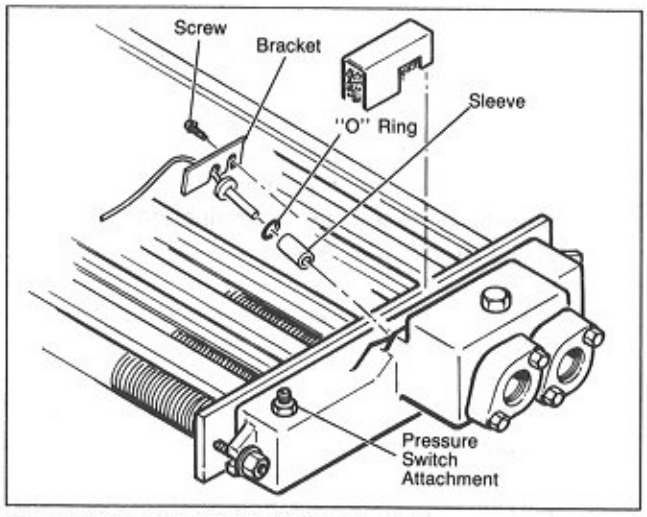

Figure 35. Temperature Sensing Bulb

⚠CAUTION

It may be necessary to have help lifting the heat exchanger out and replacing it.

17. Lift out the heat exchanger assembly, rotate it 180 degrees, and re-seat the unit in the heater.

18. Connect the pressure switch copper tubing on the back of the header, and locate the switch in its original position. Carefully straighten the copper tubing as necessary. Fasten the tubing to the rear panel using the location clip and screw.

19. Install the temperature sensing bulb in the header, securing it with the retainer bracket and cap screw. Route the copper tubing inside the heater jacket. Cover the back of the header with insulation, and replace the insulation retainer.

20. Route the wiring harness beside the heat exchanger and down to the original location. Be careful to keep the wires away from all heat producing surfaces. Connect the yellow wires to terminal TH/TP and the coil connector on the gas valve.

21. Connect the white wire labeled PS to the pressure switch. Connect the other white wire to its original location on the terminal block.

22. Replace the front and rear insulation block covers.

23. Replace the three grommets and the cap.

24. Install the drain plug and drain valves.

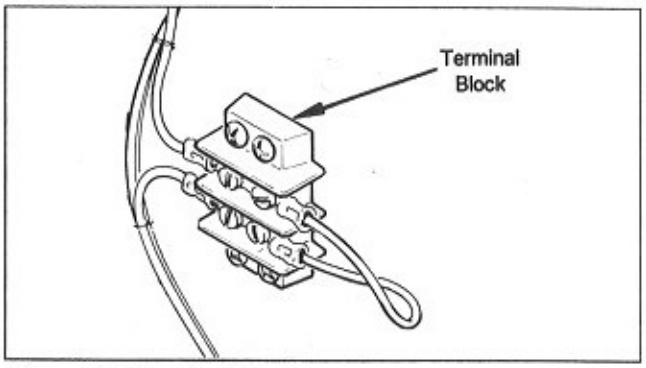

Figure 36. Terminal Block

25. Make sure the baffle retainer are secure.

26. Slip the flue collector assembly down inside the enclosure. Be sure the bottom lips are inside the grooves on the front and rear tile covers.

27. Attach the flue collector holddown clamps to the clips located under the two center header bolts. Slip the collar back down on the collector.

28. Replace the gap closures and tighten the screws securely.

29. Position the side rainshields on the flue collector.

30. Position the rear rainshield and secure it with two screws removed earlier.

31. Position the front rainshield and secure it with the four screws removed earlier.

32. Check to make sure the wiring is not pinched against sharp edges, or resting on the collector assembly.

33. Replace the top assembly. Make sure the tabs are outside the heater jacket. Secure the top assembly with the hex-head screws.

Section 6. ESG Parts List

To order or purchase parts for the Teledyne Laars Series 2 heater, contact your nearest Teledyne Laars dealer or distributor. If they cannot supply you with what you need, contact the Customer Service Dept., Teledyne Laars, 6000 Condor Dr., Moorpark, CA 93021.

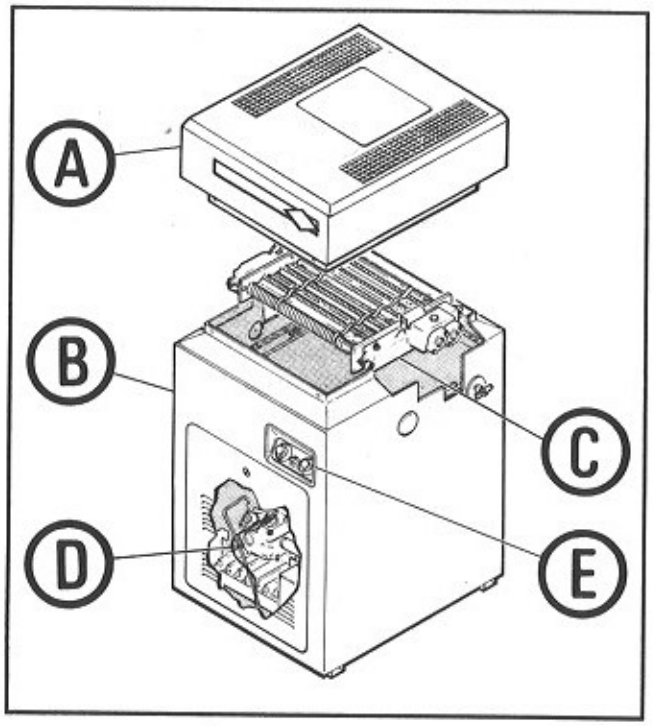

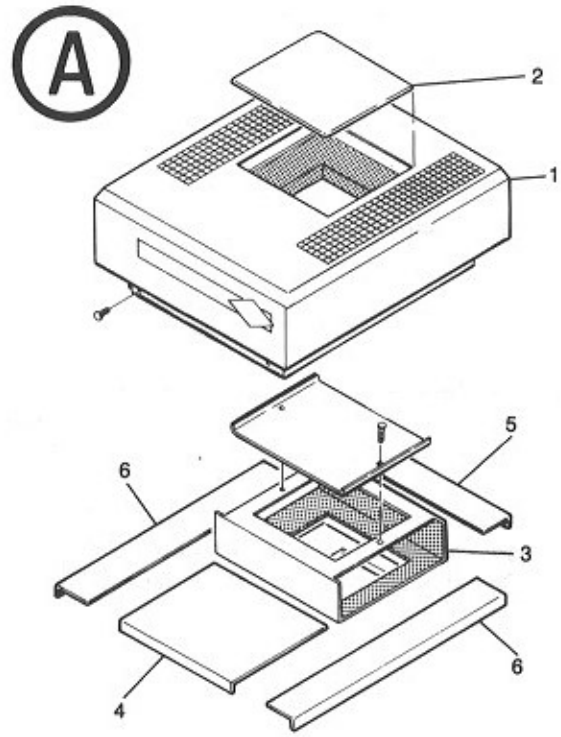

A. Venting Assembly

1.	Top Enclosure Weldment	R0097301 thru 05
2.	Top Filler Plate	10535201 thru 05
3.	Flue Collector Assy.	R0097501 thru 05
4.	Rainshield, Front	R0098001 thru 05
5.	Rainshield, Rear	R0098101 thru 05
6.	Rainshield, Side	R0098201 thru 05

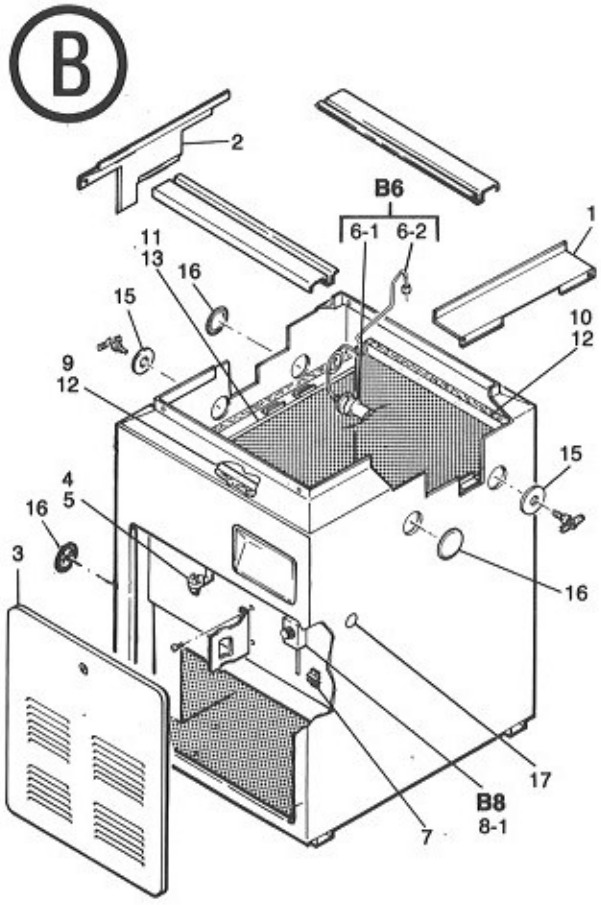

B. Jacket Assembly

	Jacket Assy, less Top Assy.	10447901 thru 05
1.	Gap Closure, Inlet/Outlet	10448200
2.	Gap Closure, Return	10448300
3.	Door w/latch	R0097401 thru 05
4.	Fusible Link	R0012200
5.	Fusible Link Bracket	10479900
6.	**Pressure Switch/Siphon Loop**	**R0097600**
6-1.	Pressure Switch, 2 psi	R0097700
6-2.	Tube, Siphon Loop	10545200
7.	Terminal Block	R0097800
8.	**Piezo Lighter Assy.**	**R0096800**
8-1.	Piezo Lighter Knob	R0097000
9.	Tile, Front	T0021501 thru 05
10.	Tile, Rear	T0021601 thru 05
11.	Tile, Side	T0021400
12.	Insulation Block, Front, Rear	10314901 thru 05
13.	Insulation Block, Side	10167300
14.	Insulation, Fiberglass (State Model)	T0002000
15.	Grommet, Drain	S0069900
16.	Grommet, Slitted	S0071100
17.	Plug, Button	F0035300
18.	Paint, Sandstone	X0016000

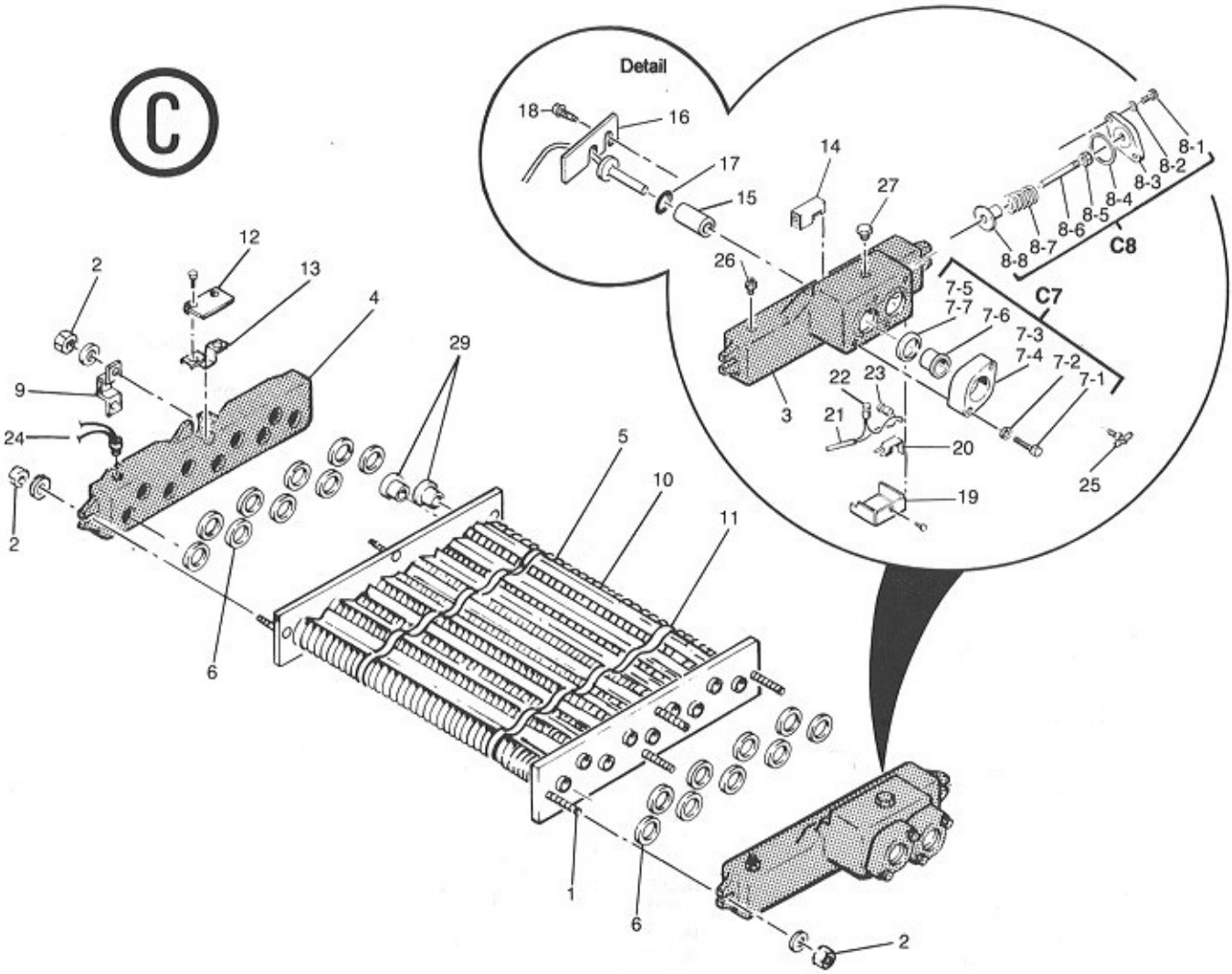

C. Heat Exchanger Assembly

	Heat Exchanger Assy. (Complete)	10606401 thru 05
1.	Bolt, Dome 2-1/2"	F0046100
2.	Nut, 3/8 - 16, Hex.	F0003100
3.	Header, Inlet/Outlet	R0056400
3.	Header, Inlet/Outlet, Bronze	R0016800
4.	Header, Return	R0058300
4.	Header, Return, Bronze	R0054600
5.	Heat Exchanger Tube Assy.	R0018101 thru 05
6.	Gasket, Header (18)	R0050800
7.	**Flange Assy.**	**R0055000**
7-1.	Bolt, Flange	F0031700
7-2.	Washer, Flange	F0011100
7-3.	Flange	10573500
7-4.	"No Sweat" Flange	R0100000
7-5.	Gasket, Flange, 2"	S0078000
7-6.	Sleeve, Flange	S0078200
7-7.	Gasket, Adapter, 2" x 1-1/2"	S0078100
8.	**Flow Valve Assy.**	**10701301 thru 05**
8.	**Flow Valve Assy., Bronze**	**10701401 thru 05**
8-1.	Bolt, Hex-Hd. 3/8", 16 x 1"	F0041600
8-2.	Washer, Plain, 3/8"	F0011100
8-3.	Cap, Flow Control	10452201
8-3.	Cap, Flow Control, Bronze	10557400
8-4.	Gasket, Flow Control	R0011400
8-5.	Nut	F0048400
8-6.	Rod, Flow Control	S0079800
8-7.	Spring, Black, 400	S0070100
	Spring, Blue, 325	S0061200
	Spring, Red, 250	S0061300
	Spring, White, 175	S0061400
	Spring, Purple, 125	S0079900
8-8.	Disk, Flow Control	R0011500
9.	Bracket, Heat Exchanger	10457000
10.	Baffle, Heat Exchanger (8)	10697401 thru 05
11.	Clip, Baffle Retainer	S0083900
12.	Clamp, Hold-down	10726200
13.	Bracket, Hold-down	10726300
14.	Bracket, Insulation Retainer	10462200
15.	Sleeve, Temp. Control Bulb	10444900
16.	Retainer Bracket	10447300
17.	"O" Ring, Temp Control Bulb	E0116400
18.	Screw, Retainer Bracket	F0009100
19.	Cover, High-limit Switch	10418300
20.	Bracket, High-limit Switch	10418400
21.	Wire Harness, High-limit Switch	10419300
22.	Disc, High-limit, 150°F	R0023000
23.	Disc, High-limit, 135°F	R0022700
24.	Redundant High-limit, 275°F	R0012800
25.	Drain Valve	P0058700
26.	Connector Assy.	P0019700
27.	Plug, 3/4" NPT	P0027000
28.	Plug, 1/4" NPT	P0026800
29.	Restrictors (2), 125 only	S0000300

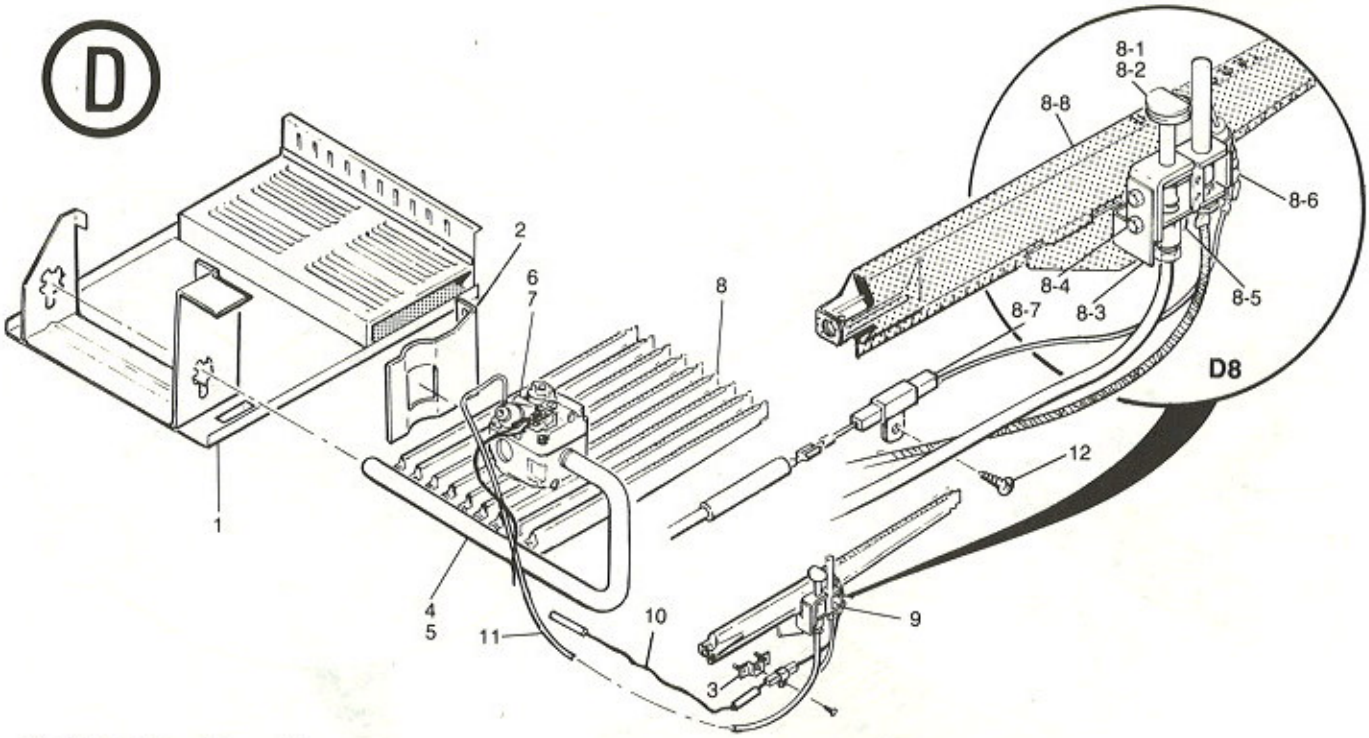

D. Burner Tray Assembly

Burner Tray Assy., Nat. ..... R0098601 thru 05
Burner Tray Assy., LP ..... R0098701 thru 05

1. Burner Tray Weldment ..... R0099501 thru 05
2. Bracket, Anti-Rotation 10577200
3. Mounting Bracket Assy. 10419200
4. Manifold, Gas, 125 ..... L0052200
   Manifold, Gas, 175 ..... L0006300
   Manifold, Gas, 250 ..... L0006400
   Manifold, Gas, 325 ..... L0006500
   Manifold, Gas, 400 ..... L0006600
5. Gas Orifice, Nat., 0K to 3K Ft. L0032200
   Gas Orifice, Nat., 3K to 6K Ft. L0032600
   Gas Orifice, Nat., 6K to 10K Ft. L0050300
   Gas Orifice, LP, 0K to 5K Ft. L0032900
   Gas Orifice, LP, 5K to 10K Ft. L0032800
6. Gas Valve, Nat. R0096400
6. Gas Valve, LP R0096900
7. Burner, Main L0052300
8. **Pilot, Main Burner Assy., LP R0099200**
8. **Pilot, Main Burner Assy., Nat. R0099100**
   8-1. Pilot Burner, LP, .010 R0096600
   8-2. Pilot Burner, Nat., .018 R0096700
   8-3. Pilot Bracket Adapter 10576400
   8-4. Screw (2) F0020700
   8-5. Screw, Pilot Bracket F0031300
   8-6. Pilot Generator W0036901
   8-7. Ceramic Insulator Assy. R0099300
   8-8 Burner, Main w/ Pilot Brkt. 10457500
9. High Voltage Lead Assy. R0098900
10. Pilot Tube R0096300
11. Screw, Oval Hd. F0034300

E. Temperature Control Assembly

Temperature Control Assy. R0099600

1. Temperature Control R0058200
2. Rocker Switch R0099800
3. Knob, Thermostat R0010700
4. TEMP-LOK Disc 10583100
5. Casting, Temp. Control Bezel S0069800

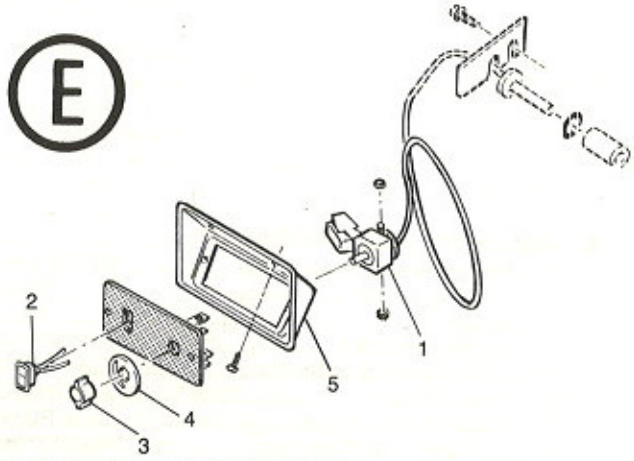

Optional Equipment

Non-Combustible Base ..... 10521701 thru 05
Pressure Relief Valve, 3/4" NPT, 75 psi A0063300

Draft hood Kit No. 10561401 thru 05 **Vent Cap Kit 10561501 thru 05**

Size	125	175	250	325	400
Draft hood	D0000025	D0017800	D0002700	D0003200	D0003300
Vent Cap	D0000500	D0000600	D0000700	D0000800	D0000900
Transition Plate	10741001	10741002	10741003	10741004	10741005
Adapter Plate	10535301	10535302	10535303	10535304	10535305
Clip (3)	10211000	10211000	10211000	10211000	10211000
Screw (6)	F0006200	F0006200	F0006200	F0006200	F0006200

6-B.CAPACITIES AND DIMENSIONS NOTE: See Section 3 for Required Clearances

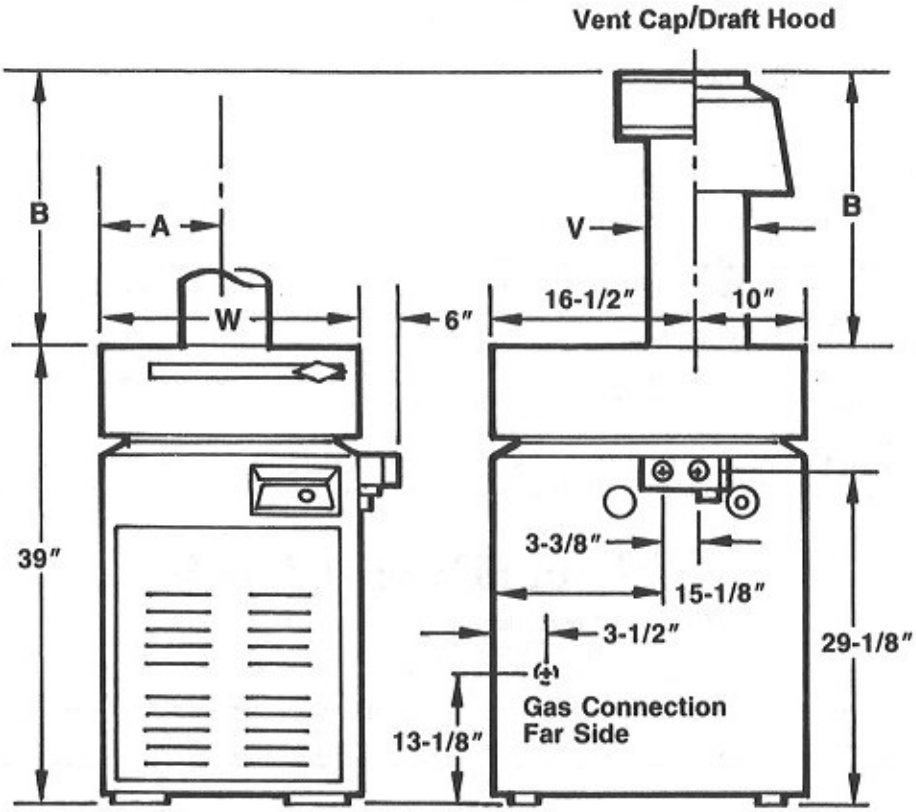

Size	Vent (V)"	Width (W)"	Stack Dimensions (in inches) Outdoor A	Outdoor B	United States Only Indoor A	United States Only Indoor B	Canada Only Outdoor Shelter A	Canada Only Outdoor Shelter B	BTU/Hr. Input (4,7)	Shipping Weight,lbs
125	5	15	7-3/4	14-1/8	7-3/4	17-7/8	7-3/4	17-7/8	125,000	215
175	6	18	9-1/4	14-5/8	9-1/4	24-7/8	9-1/4	24-7/8	175,000	240
250	7	22-1/2	11-3/8	18-3/4	11-3/8	25	11-3/8	25	250,000	270
325	8	26-3/4	13-5/8	18	13-5/8	25	13-5/8	25	325,000	310
400	9	31-3/4	16-1/8	20-3/4	16-1/8	26	16-1/8	26	400,000	345

NOTES:

1. The Series 2 is design-certified by A.G.A. as a swimming pool heater for both natural gas and propane gas.
2. The Series 2 is certified by C.G.A. as a swimming pool heater for both natural gas and propane gas.
3. The Series 2 is constructed for 75 psi working pressure.
4. Derate Btu/hr. input and output 10% for altitudes of 2,000 to 4,500 feet above sea level. No derating necessary up to altitude of 2,000 feet. In United States derate input and output 4% for each additional 1,000 feet above 4,500 feet.
5. The Series 2 is design-certified by A.G.A. for indoor or outdoor use in the United States.
6. The Series 2 is certified by C.G.A. for outdoor and outdoor shelter use in Canada.
7. Ratings shown are for both natural and propane gas.

TELEDYNE LAARS SERIES 2
LIMITED WARRANTY

Your Teledyne Laars Series 2 pool/spa heater is backed by this double warranty to assure your complete satisfaction.

1. Controls, copper heat exchanger tubes and firebox panels are warranted against defects in materials and workmanship for two (2) years from date of purchase.

2. All other parts are warranted against defects in materials and workmanship for five (5) years from date of purchase.

The above warranty applies only if the installation and operating instructions applicable to the model purchased are expressly and completely followed. These instructions are furnished with the unit and are also available by writing the Teledyne Laars factory. The liability of Teledyne Laars shall not exceed the repair or replacement of defective parts, and shall not include transportation to or from factory, field labor, and consequential or incidental damages. Ship inoperative parts or complete heater with Serial number, Model number and purchase date, transportation prepaid, directly to address below, attention Return Goods Dept.

This warranty gives you specific legal rights. You may also have other rights which vary from state to state. Some states do not allow the exclusion or limitation of incidental or consequential damages, so the above limitation or exclusion may not apply to you.

TELEDYNE LAARS

6000 Condor Drive, Moorpark, CA 93021 ☐ (805) 529-2000
20 Industrial Way, Rochester, NH 03876 ☐ (603) 335-6300
480 S. Service Road West, Oakville, Ont., Canada L6K 2H4 ☐ (905) 844-8233

TELEDYNE LAARS

☐ 20 Industrial Way, Rochester, N.H. 03867 ● (603) 335-6300 FAX (603) 335-3355
☐ 480 S. Service Road West, Oakville, Ontario, Canada L6K 2H4 ● (905) 844-8233 FAX (905) 844-2635
☐ 6000 Condor Drive, Moorpark, CA 93021 ● (805) 529-2000 FAX (805) 529-5934